VEGA
ABSOLUTE



INTERNET OF THINGS

Product Catalog

ABOUT COMPANY

Idea → Project → R&D Software Development → Case and Board Design → Mold Production → Case Making → Harnesses Production → Assembly of Components on Printed Circuit Boards → Packing of Finished Product → Realization

The company «Vega-Absolute» is located in the city of Novosibirsk and is a full-cycle enterprise from the idea to the final product. All processes in the technological chain are carried out at our own enterprise, which has two production sites equipped with high-tech equipment.

Two modern surface mounting lines, automated machines for making molds and casting cases from ABS and other types of plastic, two automatic lines for the production of harnesses as well as production workshops equipped with high-tech equipment, where mounting, control, testing, assembly and packing of finished devices are located at the production sites of the enterprise.

At each stage, product quality is monitored in accordance with international standards ISO 9001:2015 and IATF 16949:2016.















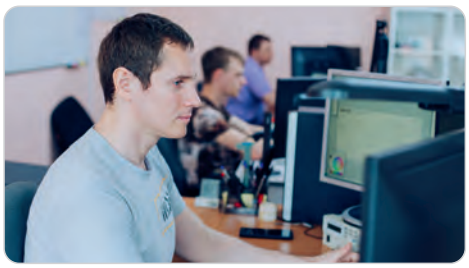



ABOUT COMPANY

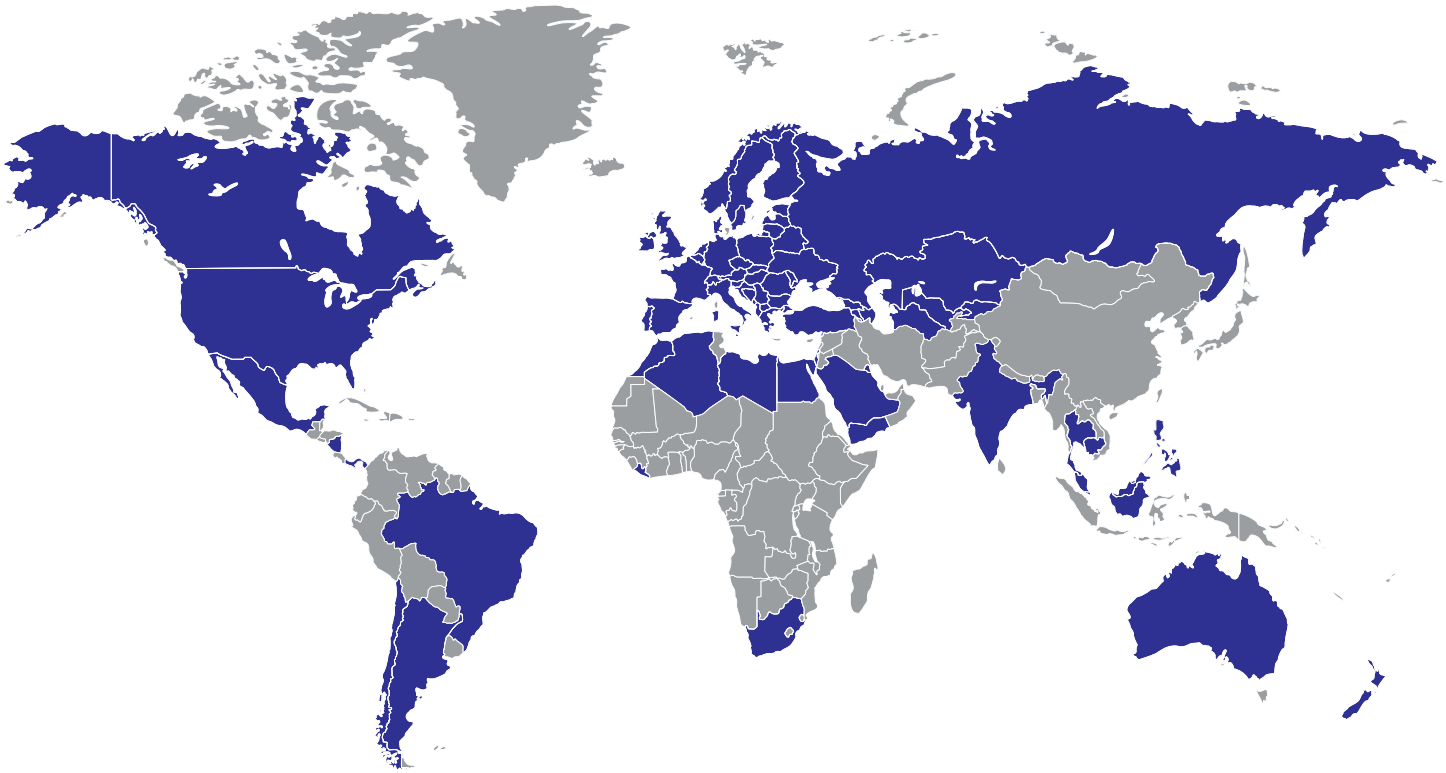



















INTERNET OF THINGS

IoT (Internet of Things) - This is the concept of space, where the objects of the real world and virtual objects surrounding us are combined into a single network. This is a lot of different devices and sensors, interconnected by wired and wireless communication channels and connected to the Internet, but in addition, a closer integration of the real and virtual worlds in which communication is made between people and devices.

For more than five years, our company has been engaged in the development and production of equipment and software that allows us to implement projects in the field of the Internet of Things and Smart Cities and is a member of an international organization LoRa Alliance. This catalog contains devices that allow you to combine the needs of automation of data collection and various data transfer technologies such as LoRa, NB-IoT, GPS/GLONASS, 3G, LTE.



UTILITIES



AGRICULTURE



SMART HOME



RETALE



INDUSTRY



HEALTHCARE

CONTENT

SOLUTIONS FOR YOURS SYSTEMS 6

SOFTWARE 9

GATEWAYS 11

Vega BS-1.2, Vega BS-2.2 and Vega BS-2.2 LTE 11
Vega BS-3 12
Vega BS-0.1 13

NETWORK TESTERS 13

TS-12 13

LORAWAN END DEVICES 14

Comparative characteristics 14
SI-11 – Pulse Counter 15
SI-12 – Pulse Counter with two outputs 16
SI-13-232 – Converter RS-232 17
SI-13-485 – Converter RS-485 17
SI-22 – Pulse Counter 18
TD-11 – Temperature Sensor 19
TL-11 – Temperature Logger 20
M-BUS-1 – Converter M-BUS 21
M-BUS-2 – Converter M-BUS 22
TP-11 – Converter 4-20 mA 23
GM-2 – LoRaWAN® Modem for Elster gas meter 24
LM-1 – Search Device 25
Vega DP-2 – Leakage Sensor 26
Antenna 868-01 26
Antenna 868-01-A10 26

NB-IoT END DEVICES 27

NB-11 – NB-IoT Pulse Counter With An External Antenna 28
NB-12 – NB-IoT Modem With 4-20 mA Interface 29
NB-13 / NB-13 GSM – NB-IoT Modem With RS-232/RS-485 Interface 30
NB-14 – NB-IoT Modem With Resistance Control 31
NB-15 – Multipurpose Modem NB-IoT 32
SH-2 – Multipurpose Modem LoRaWAN® 33

SMART METERING DEVICES 34

Comparative characteristics 34
LoRaWAN® And NB-IoT Smart Meters For Hot And Cold Water 35
Ce2726A – Single-Phase Electricity Meter 36
Mercury 206 – Single-Phase Electricity Meter 36
Ce2727A – Three-Phase Electricity Meter 37
SGBM-1,6 – Gas Electronic Meter 38
FSK Dongle 39
Converter USB <-> Optoport For Electronic Water Meters 39

VEGA SMART SERIES 40

Comparative characteristics 40
Smart-UM0101 – Universal Office Sensor 5 in 1 41
Smart-MC0101 – Door and Window Sensor 42
Smart-HS0101 – Sensor Of Humidity/Temperature/Door And Window/Acceleration 43
Smart-MS0101 – Motion Sensor 44
Smart-SS0102 and Smart SS0201 – Stand-Alone Fire Smoke Detector 45

OUR PARTNERS 46

Solutions

Utilities

The main function of IoT in this area is to reduce losses and effectively manage the consumption of resources: electricity, water, heat. Smart meters independently calculate the flow rate and transmit data via the LoRaWAN® protocol about the current state to the server. Management companies and users themselves receive information from the server. And the controls of metering devices will allow you to remotely stop the flow of certain resources in the event or an accident or non-payment.






Pulse Counter SI-11

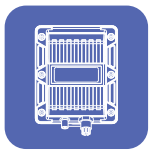
Converter M-BUS-1


Gateway BS-2.2


Gas Meter SGBM-1,6


Water Meter SHVE-15

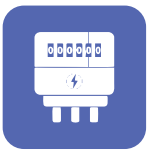
Electricity Meter CE2627A


IOT Vega Server

Working Conditions Monitoring

With our new universal sensors you can monitor environmental conditions in any room where this is required. Sensors can measure the concentration of dust particles, carbon dioxide, temperature and humidity parameters, as well as the level of illumination and noise. Information about the state of the environment can be important for maintaining a favorable atmosphere for both personnel and some types of special equipment.






Universal Office Sensor 5 in 1 Smart-UM0101


Gateway BS-2.2


IOT Vega Server

Solutions

Goods And Equipment Monitoring

A search device with a built-in radio module is a completely new word in the field of detection and search for a protected object. The low power consumption of LoRaWAN® data transfer technology allows you to provide autonomous operation of the device for up to 10 years without replacing the battery.

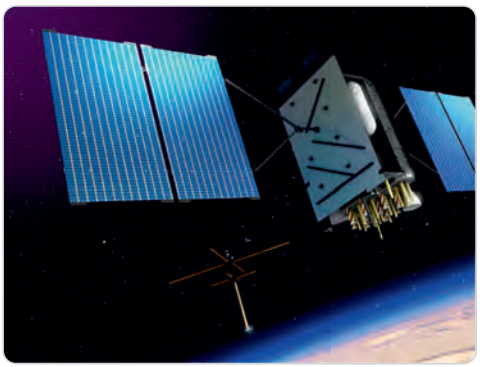




Search Device Vega LM-1


Gateway BS-2.2


IOT Vega Server

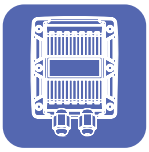
Temperature Logger Vega TL-11

Security

With Vega Smart Series devices, you can make any home smarter and safer. In our line, introduce stylish and functional devices using LoRaWAN® technology, which inform the owner in case of opening/closing doors, windows, motion detection in a protected area, operation of smoke detectors, flooding, etc.







Door and Window Sensor Smart-MC0101


Acceleration Sensor Smart-AS0101


Smoke Sensor Smart-SS0102


Leakage Sensor DP-1


Motion Sensor Smart-MS0101


Pulse Counter SI-11


Gateway BS-2.2


IOT Vega Server

Solutions

Industry

In the industry, LoRaWAN® technology can be applied at all stages of the production cycle. Smart sensors will help to monitor production parameters, such as temperature, pressure, the amount of a substance in the tank, and to report all changes in a timely manner to prevent undesirable consequences.
All our equipment and software can be used as part of SCADA systems.





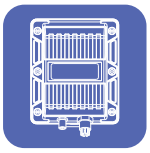
Converver TP-11


Temperature Sensor TD-11


Gateway BS-2.2


IOT Vega Server

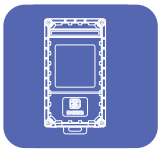
Pulse Counter SI-11


Pulse Counter SI-13-485

Staff Monitoring

With the help of smart devices, labor protection has risen to a new level. Now you can regularly read the indicators of the working environment in difficult access conditions, such as mining quarries, logging, and so on. In addition, such devices not only help the employee to carry out their tasks, but also ensure his safety by warning the dispatcher about leaving a given area, as well as informing his coordinates, which allows finding an employee in case of an emergency.






Search Device Vega LM-1


Gateway BS-2.2


IOT Vega Server

Software

IOT Vega Server



The IOT Vega Server network server is a tool for organizing LoRaWAN® networks of any scale. Designed to manage the core network of gateways running Packet forwarder software from Semtech, receive data from end devices and transfer them to external applications, as well as transfer data from external applications to LoRaWAN® devices. The server operates according to the LoRaWAN® specification 1.02 and supports any end devices operating in accordance with this specification.

Vega NB-IoT Configurator



The NB-IoT configurator is designed to configure operation parameters of NB-IoT end devices via USB connection. Using the configurator, you can configure the used frequency bands, the period of data collection, the period of communication, and much more. The program has a simple intuitive interface and allows for fine-tuning, as well as uploading the firmware of the end device.

Vega LoRa Scaner



The LoRa Scaner program is designed to quickly and conveniently add Vega-Absolute LoRaWAN® end devices to the IoT Vega Server. To work with the program, a QR-code scanner is required. Thus, the program allows you to scan the QR code which is on the label of each LoRaWAN® device manufactured at the Vega-Absolute factory, and which contains all the necessary information for registration on the server. After that, the program can add these devices in automatic or manual mode to the server with predefined settings.

IOT Vega AdminTool



AdminTool provides the server administrator with extensive LoRaWAN® network management capabilities. With AdminTool, you can add new LoRaWAN® ends to the network, view the network map, control gateways, and manage user rights. IOT Vega AdminTool is provided for free as a WEB application.

IOT Vega Pulse



IOT Vega Pulse client application is a tool for simple and convenient collection and display of water meters, electric meters, gas meters with pulse outputs. In addition, the application can be used to protect buildings and premises, displaying alarms online with security sensors connected to the end device. IOT Vega Pulse works in conjunction with IOT Vega Server through the Web-Socket API. The IOT Vega Pulse web application is provided free of charge in the form of source codes. This allows our customers to easily adapt the appearance of the application to their own brand.

SCADA-system «Web-Probe»

The SCADA-System "Web-PROBE" was developed by our partner company "Gazpriboravtomatika" and is designed to develop small and medium-sized automation systems for process control, data collection, processing, storage, visualization and transmission. Scope in various industries.

Software

IOT Vega Notifier



IOT Vega Notifier is a tool for sending SMS and voice notifications to users of IOT Vega Pulse in case of various events or alarms. Voice messages are synthesized from text using the built-in speech synthesizer. Text for SMS and voice messages is configured individually for each end device via IOT Vega Pulse.

Vega LoRaWAN® Configurator



LoRaWAN® Configurator allows you to configure and control endpoint devices when connected via USB. In addition, using this application, you can update the device firmware. The application automatically recognizes the connected device and displays the parameters and settings for this type of end devices. The configurator works in two modes - “Simple” and “Expert” with advanced settings for advanced users.

LoRa2ModBus



The Vega LoRa2ModBus program is designed to provide the ability to process data received from end devices with external programs running the ModBus TCP protocol. Vega LoRa2ModBus connects to the IOT Vega Server and converts data from the specified device into a map of the ModBus registers. Thus, data from the end device can be read using any external program using the ModBus TSP protocol, which allows the use of end devices in automated manufacture process control systems.

LoRa2TCP



The Vega LoRa2TCP program is designed to organize the transparent exchange of external applications with metering devices directly or with RS-485 or RS-232 connected to SI-13. Vega LoRa2TCP connects to IOT Vega Server using the API and opens several listening ports for listening, each of which corresponds to a specific SI-13 radio modem, or to a specific electric meter. All data received in the TSP port from an external application is transmitted to the meter through the LoRaWAN® network. The response of the meter is transmitted in reverse order to the external application. This solution allows you to use the LoRaWAN® network as the transparent last mile to the meter, which can be connected to any automated systems that can interrogate metering devices via TSP-IP.

IOT Vega TimeCorrector



IOT Vega TimeCorrector is a tool for automatic time adjustment on end devices connected to IOT Vega Server.
End devices once a day communicate with the server and send a packet with the current time. IOT Vega TimeCorrector is connected to IOT Vega Server via WebSocket API. Receiving packets with the current time from devices, the program compares the time of the end device with its own and sends time adjustment packets to the devices in case of significant deviations.

Module LoRaParsing

The software module of the LANTANSoft platform, designed to collect, process and store data from LoRaWAN® networks, was developed by our partner company, PLKSystems.
The simple visual interface of the LoRaParsing module makes it easy to create and administer LoRaWAN® projects of varying degrees of complexity by users who do not have specific knowledge of LoRaWAN® technology.

Gateways LoRaWAN® Vega BS-1.2, Vega BS-2.2 and Vega BS-2.2 LTE



GPS * 3G * IP67

* Only BS-2.2 model has those options

DESCRIPTION

This version of the gateway is distinguished by a plastic case with protection class IP67. The case model is designed for harsh placement conditions and strong mounts allow for reliable installation of the gateway on the masts.
Vega BS-2.2 has a built-in GPS receiver and a 3G modem.

APPLICATION

Gateways can be used in networks of the LoRaWAN® standard for two-way data exchange between a network server and end devices.

- Automated collection of meter readings
- Industrial monitoring and control systems
- Systems "Smart House", "Smart City"

CONNECTION

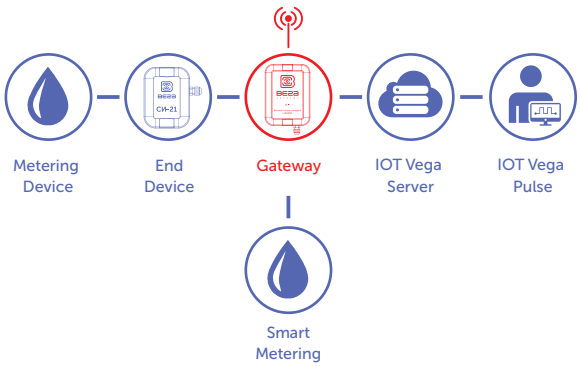

SPECIFICATION

Main	BS-1.2	BS-2.2	BS-2.2 LTE
GPS-receiver	no	yes, with internal antenna	
GSM-modem	no	yes	
Server communication link	Ethernet	Ethernet, GSM 3G	Ethernet, GSM LTE
Operating system	Linux		
USB-port	yes		
Operating temperatures	-40...+70 °C		
LoRaWAN®			
Number of LoRaWAN® channels	8		
Frequency plan	RU868, EU868, KZ865		
Power output	up to 500 mW		
Antenna connector	N-Type female		
Radio coverage in restrained urban conditions	up to 5 km		
Radio coverage within line of sight	up to 15 km		
Power			
Power consumption	no more than 10 W		
Power type	Passive POE 4,5(+) 7,8(-) 15W		
Case			
Housing dimensions, no more than	192 x 183 x 75 mm		
Ingress protection rating	IP67		
Mounting	mast supports		
Package			
Package dimensions	250 x 220 x 85 mm		
Weight	1,230 kg	1,250 kg	

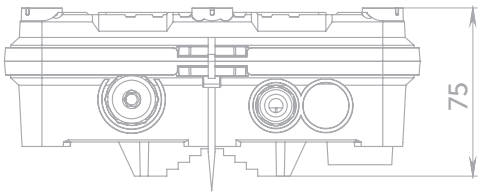

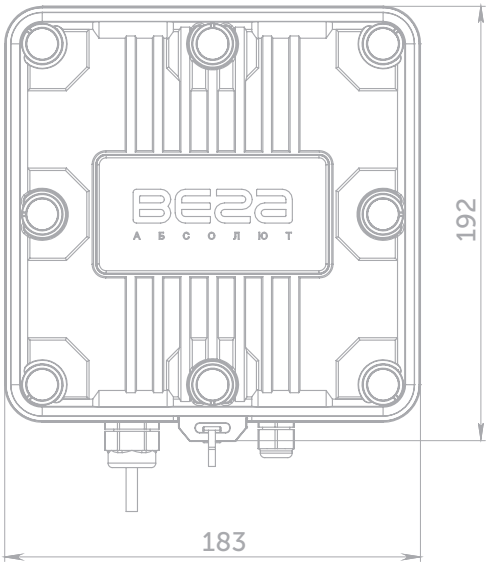

Gateway LoRaWAN® Vega BS-3

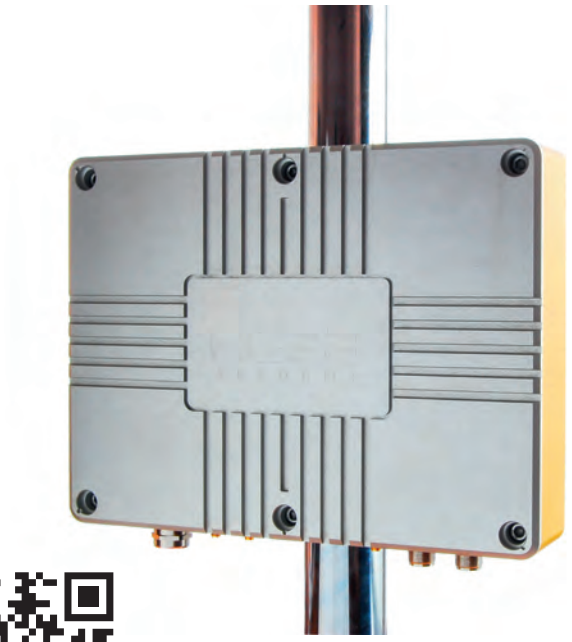

GPS | 3G/LTE | IP67 | 16 or 64 channels

DESCRIPTION

The new version of the Vega BS-3 gateway has a number of improvements and advanced functionality.
This version of the gateway has the ability to work on 16 channels, and when installing an expansion card, this number increases to 64 channels.
Communication with the server is carried out both via Ethernet and through a 3G/LTE network. And a completely new function - geolocation - the ability to determine the location of end devices based on signals from gateways. To do this, you must install from three Vega BS-3 gateways.

APPLICATION

Gateways can be used in LoRaWAN® networks for two-way data exchange between a network server and end devices.

- Automation of collection of meter readings
- Industrial monitoring and control systems
- Determination of the location of end devices using signals from LoRaWAN® gateways on the street and indoors with an accuracy of 100 m
- Systems "Smart House, "Smart City"

CONNECTION

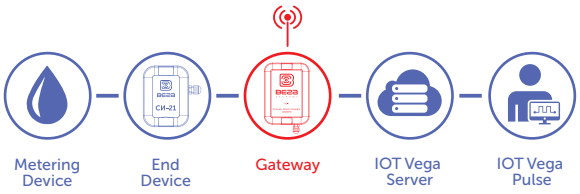

SPECIFICATION

Main	
GNSS-module	Internal, with supporting GPS, GLONASS, BeiDou, QZSS, SBAS and Galileo
GNSS Antenna	External, active, with coaxial cable
LTE-modem	Quectel EC21-E
Server communication link	Ethernet, 3G/LTE
Operating system	Linux
USB-port	yes
Built-in Sensors	Temperature, pressure, tamper
Operating temperatures	-40...+70 °C
LoRaWAN®	
Number of LoRaWAN® channels	16 or 64 (with extended board)
Frequency plan	RU868, EU868, KZ865
Radio coverage in restrained urban conditions	up to 5 km
Radio coverage within line of sight	up to 15 km
Power	
Power	24 В
Case	
Housing dimensions, no more than	285 x 213 x 67 mm
Ingress protection rating	IP67
Tamper	yes
Lighting conductor	yes
Vandal-proof execution	yes

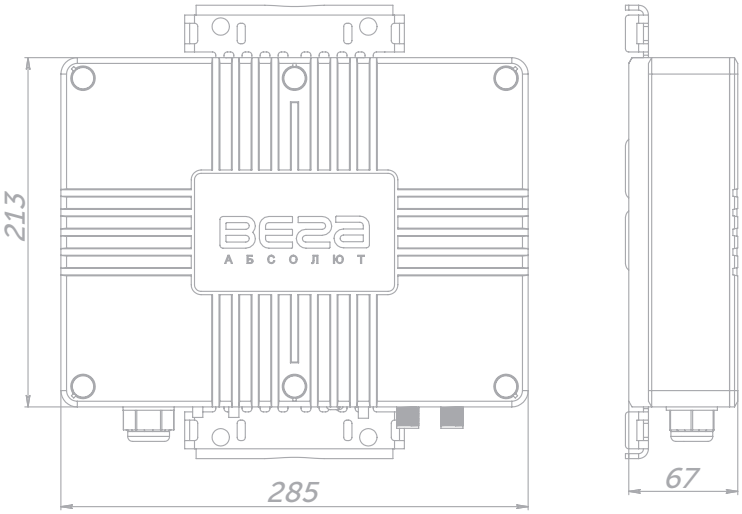

Vega TS-12 – Network Tester



class A | IP64 | 550 mAh

SPECIFICATION

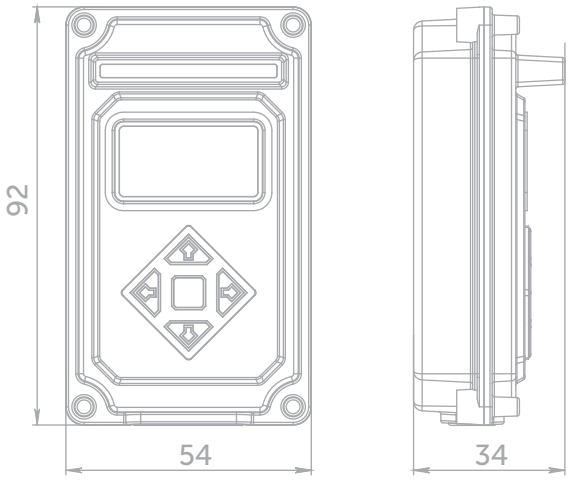

Main	
Operating temperatures	-40...+85 °C
Display	OLED, 1,3"
GNSS module	yes
GNSS Antenna type	internal
LoRaWAN®	
LoRaWAN device class	A
LoRa antenna type	internal
Sensitivity	-138 dBm
Radio coverage in restrained conditions	up to 5 km
Radio coverage within line of sight	up to 15 km
Power	
Built-in battery capacity	550 mAh
Case	
Ingress protection rating	IP64
Housing dimensions	92 x 54 x 34 mm
Package	
Package dimensions	93 x 54 x 34 mm
Weight	0,090 kg

DESCRIPTION

The network tester sends a special signal to the LoRaWAN® network, in response to which the network informs it of the number of gateways that have received this signal and the signal quality. The tester displays this data every time the button is pressed. Thanks to the built-in battery, the device can work autonomously for several hours.
Vega TS-12 is additionally equipped with a GNSS module, which allows it to determine its coordinates by satellite and transmit them to the LoRaWAN®.

APPLICATION

The device can be used to test LoRaWAN® networks when they are deployed and configured. The tester helps to decide on the best placement of gateways and ends relative to each other.

Gateway LoRaWAN® Vega BS-0.1

Wi-Fi | 8 channels



DESCRIPTION

Gateway Vega BS-0.1 is designed for indoor use and has a miniature case. It also has the ability to connect to the Internet via Ethernet cable and Wi-Fi.

APPLICATION

- Construction of Smart Home/Office systems based on LoRaWAN® technology
- Management and monitoring of personnel and/or equipment in the technological cycle
- Data collection in radio-tight rooms, drawers, etc.

CONNECTION

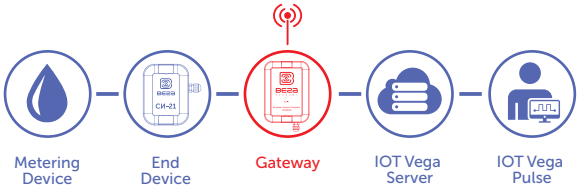

SPECIFICATION

Main	
Server communication link	Ethernet, Wi-Fi (default) 3G/LTE (on demand)
Operating temperatures	0...+70 °C
LoRaWAN®	
Number of LoRaWAN® channels	8
Frequency plan	RU868, EU868, KZ865
LoRa Antenna	internal

LoRaWAN® End Devices







	SI-11	SI-12	SI-13-232	SI-13-485	TD-11	SI-22	TP-11	M-BUS-1	M-BUS-2	TL-11	LM-1
Pulse inputs	Up to 4	Up to 4	Up to 2	Up to 2	-	Up to 4	-	-	-	-	-
Security inputs	Up to 4	Up to 4	Up to 2	Up to 2	1	Up to 4	2	2	-	-	-
Input interface	-	-	RS-232	RS-485	temperature		4-20mA	M-BUS		-	-
External Temperature Sensor	-	-	-	-	1	1	-	-	-	2	-
GPS/GLONASS Module	-	-	-	-	-	-	-	-	-	-	internal
Open-Drain Outputs	-	2	-	-	-	-	2	2	-	-	-
Internal Battery Capacity	3600	3600	-	-	3600	3600	6400	6400	6400	6400	6400/ 12800
External Power	-	5 V	8...36 V		-	-	10...36 V		-	-	-
Размеры корпуса	90 x 49 x 46					96 x 96 x 50	93 x 78 x 66		104 x 95 x 29	93 x 78 x 38	93 x 78 x 38
Housing dimension	IP65					IP67	IP65		IP54	IP67	IP67
LoRaWAN Device Class	A	A or C	C	C	A	A	A or C	A or C	A		
Antenna Type (LoRa)	internal					external				internal	
LoRa Channels Number	16										
Frequency plan (default)	RU868, EU868, KZ865										
Frequency plan (on demand)	any regional according to "LoRaWAN 1.1 Regional Parameters"										
Activation type	ABP or OTAA										
Communication Period	5, 15, 30 minutes, 1, 6, 12 and 24 hours										
Sensitivity	-138 dBm										
Radio Coverage In Restrained Urban Conditions	up to 5 km										
Radio Coverage Within Line of Sight	up to 15 km										
Transmitter Power By Default	25 mW (configurable)										

Vega SI-11 – Pulse Counter



DESCRIPTION

Pulse counter Vega SI-12 is designed to count electrical pulses arriving at 4 independent inputs, with the subsequent accumulation and transmission of this information to the LoRaWAN® network. Any of the four inputs can be configured to use as security.

APPLICATION

- Collection and transmission of data from a casing with a pulse output
- Industrial equipment with pulse output
- Utilities metering devices
- Security Systems
- Temperature Measurement



SPECIFICATION

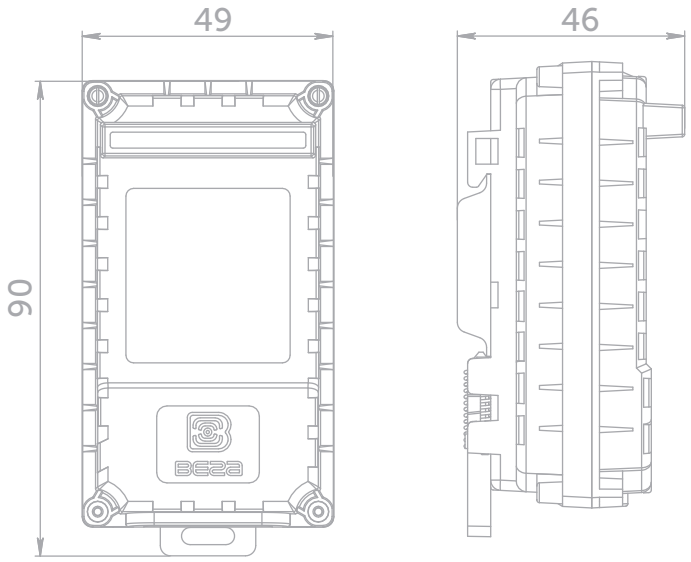

Main	
Pulse inputs	up to 4
Maximum frequency of input signal	200 Hz
Security inputs	Up to 4
USB-port	yes
Operating temperatures	-40...+85 °C
Built-in temperature sensor	yes
LoRaWAN®	
LoRa class	A
LoRa antenna type	internal
Power	
Built-in battery	3600 mAh
Continuous battery life	up to 10 years
Case	
Housing dimensions, no more than	90 x 49 x 46 mm
Ingress protection rating	IP65
Mounting	clamp fastening to the support, DIN-rail, wall-mounting
Package	
Package dimensions	95 x 50 x 46 mm
Weight	0,093 kg

CONNECTION

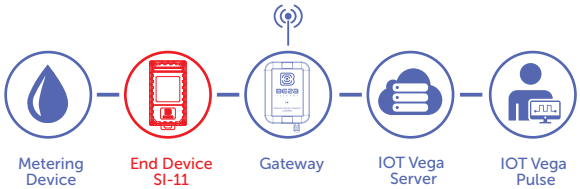

Vega SI-12 – Pulse Counter With Two Outputs



DESCRIPTION

Pulse counter Vega SI-12 is designed to count pulses arriving at 4 independent inputs, with the subsequent accumulation and transmission of this information to the LoRaWAN® network for controlling external actuators. Any of the four inputs can be configured to use as security.

APPLICATION

- Collection and transmission of data from a casing with a pulse output
- Industrial equipment with pulse output
- Utilities metering devices
- Security Systems
- Temperature Measurement
- Management of the connected devices through open-drain outputs

SPECIFICATION

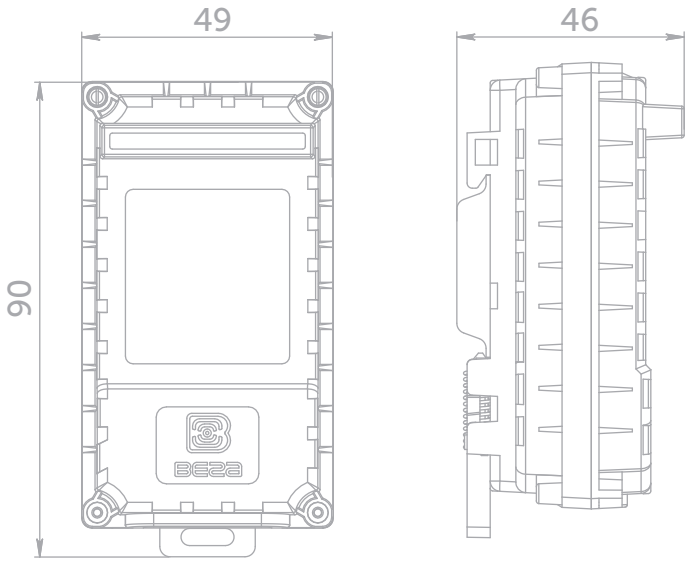

Main	
Pulse inputs	up to 4
Maximum frequency of input signal	200 Hz
Open-drain outputs	2
Security inputs	up to 4
USB-port	yes
Operating temperatures	-40...+85 °C
Built-in temperature sensor	yes
LoRaWAN®	
LoRa class	A or C depend on presence of external power supply
LoRa antenna type	internal
Power	
External type	5 V
Built-in battery	3600 mAh
Continuous battery life	up to 10 years
Case	
Housing dimensions, no more than	90 x 49 x 46 mm
Ingress protection rating	IP65
Mounting	clamp fastening to the support, DIN-rail, wall-mounting
Package	
Package dimensions	95 x 50 x 46 mm
Weight	0,095 kg

CONNECTION

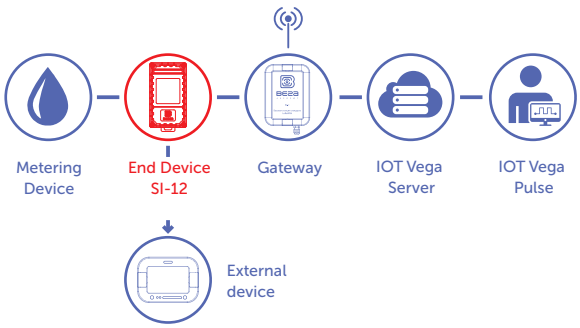

Vega SI-13 – Converter RS-232/RS-485 <-> LoRaWAN



RS-232 RS-485 +85 -40°C

from 8 to 36V class C 2 security IP65

DESCRIPTION

The pulse counter Vega SI-13-232/SI-13-485 can operate in the LoRaWAN® <-> RS-232/RS-485 transparent mode, as well as calculate the electrical pulses received at 2 independent inputs, followed by accumulating and transmitting this information to the LoRaWAN® network.

APPLICATION

- Data collection and transmission from equipment with RS-232/RS-485 interface or with pulse output
- Industrial equipment with RS-232/RS-485 interface or with pulse output
- Utility metering devices with RS-232/RS-485 interface
- Security Systems
- Temperature measurement

SPECIFICATION

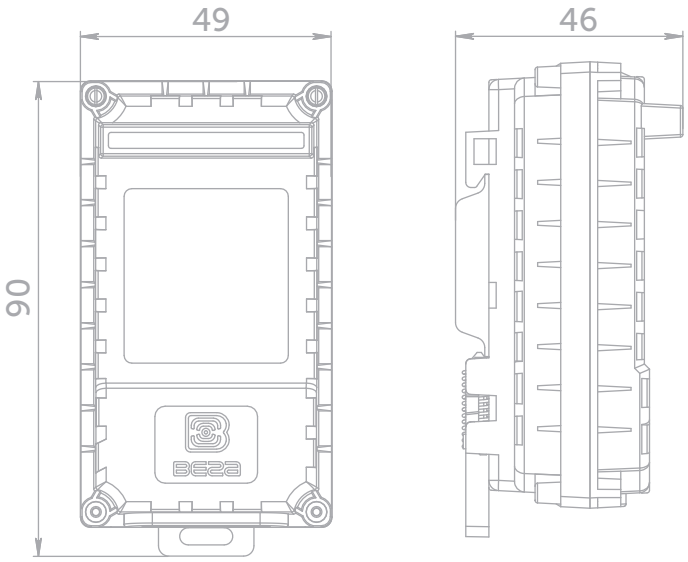

Main	SI-13-232	SI-13-485
Pulse inputs	up to 2	
Maximum frequency of input signal	200 HZ	
Interface	RS-232	RS-485
Security inputs	up to 2	
USB-port	yes	
Operating temperatures	-40...+85 °C	
Built-in temperature sensor	yes	
LoRaWAN®		
LoRa class	C	
LoRa antenna type	internal	
Power		
External power	from 8 to 36 V	
Case		
Housing dimensions, no more than	90 x 49 x 46 mm	
Ingress protection rate	IP65	
Mounting	clamp fastening to the support, DIN-rail, wall-mounting	
Package		
Package dimensions	95 x 50 x 46 mm	
Weight	0,071 kg	0,073 kg

CONNECTION

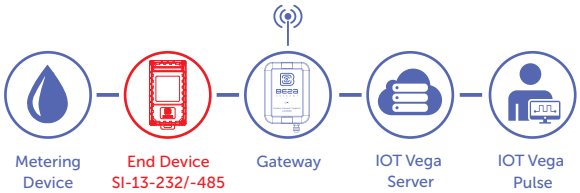

Vega SI-22 – Pulse Counter



DESCRIPTION

The Pulse counter Vega SI-22 is designed to count electrical pulses arriving at 4 independent inputs, with the subsequent accumulation and transmission of this information to the LoRaWAN® network.

The SI-22 has an external LoRaWAN® antenna and case protection is IP67. It is also possible to connect an external temperature sensor for taking temperature readings.

APPLICATION

- Data collection and transmission from pulse equipment output
- Industrial equipment with pulse output
- Utilities metering devices
- Security Systems
- Connection of an external temperature sensor
- Possibility of use in conditions of short-term water ingress
- For installation in places with low penetration of a radio signal
- Underground communications control



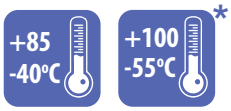

* Measurement temperatures by an external temperature sensor

SPECIFICATION

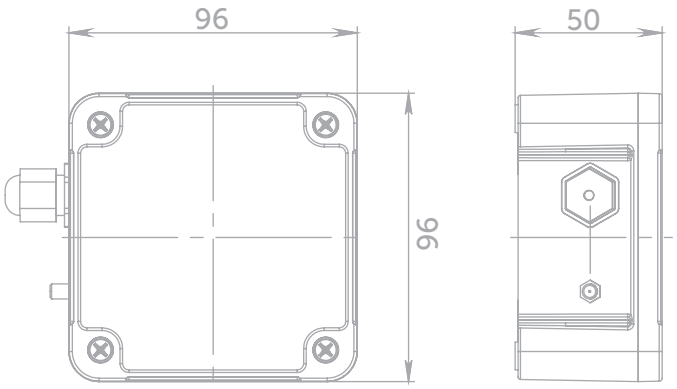

CONNECTION



Main	
Pulse inputs	up to 4
Maximum frequency of input signal	200 Hz
Security inputs	up to 4
USB-port	yes
Operating temperatures	-40...+85 °C
Ability to connect an external temperature sensor	yes
LoRaWAN®	
LoRa class	A
Antenna connector	SMA
Power	
Built-in battery	3600 mAh
Continuous battery life	up to 10 years
Case	
Housing dimensions, no more than	96 x 96 x 50 mm
Ingress protection level	IP67
Package	
Package dimensions	165 x 118 x 57 mm
Weight	0,365 kg

Vega TD-11 – Temperature Sensor



DESCRIPTION

The Temperature Sensor is a LoRaWAN® transmitter with an external measuring element. The device can communicate with a specified period and transmit temperature readings to the LoRaWAN® network. The external measuring element has a convenient mounting hole for screw mounting.

The device also has a Hall sensor that responds to changes in the external magnetic field, which allows TD-11 to be used for control opening/moving.

APPLICATION

- Temperature measurement in non-aggressive areas (liquids, gases)
- Temperature measurement of process equipment
- Temperature monitoring in difficult to reach places
- Security systems

SPECIFICATION

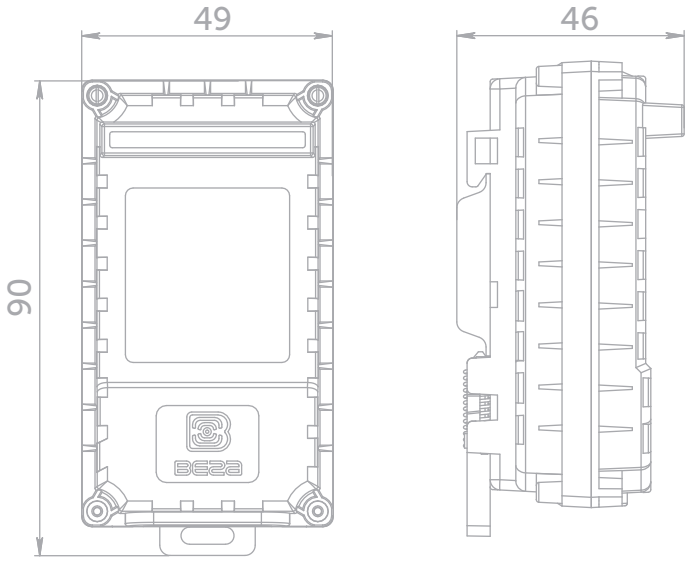

Main	
Security inputs	1
USB-port	yes
Measurement temperatures	-55...+100 °C
Operating temperatures	-40...+85 °C
Hall sensor sensitivity	5 mT, bipolar
LoRaWAN®	
LoRa class	A
LoRa antenna type	internal
Power	
Built-in battery	3600 mAh
Continuous battery life	up to 10 years
Case	
Housing dimensions	90 x 49 x 46 mm
Ingress protection rate	IP65
Tamper	yes
Mounting	clamp fastening to the support, DIN-rail, wall-mounting
Package	
Package dimensions	95 x 50 x 46 mm
Weight	0,114 kg

class A | IP65 | 3600 mAh | +85 -40°C | +100 -55°C *

* Measurement temperatures by an external temperature sensor

CONNECTION



Vega TL-11 – Temperature Logger



DESCRIPTION

The temperature logger is designed for long-term autonomous collection and storage of data on a controlled environment (air, non-corrosive gases, liquids, bulk materials, food). The temperature is measured using two thermistors: a remote probe connected to a thermostat and a built-in external thermistor. Temperature values are archived in the device's memory with reference to time, and then, when a stable connection with the LoRaWAN® network appears, the archived data is uploaded to the network.

APPLICATION

- Transportation of perishable goods
- Control of transportation conditions
- Storage conditions

class A | IP67 | 6400 mAh | +85 -40°C | +100 -55°C*

* Measurement temperatures by an external temperature sensor

SPECIFICATION

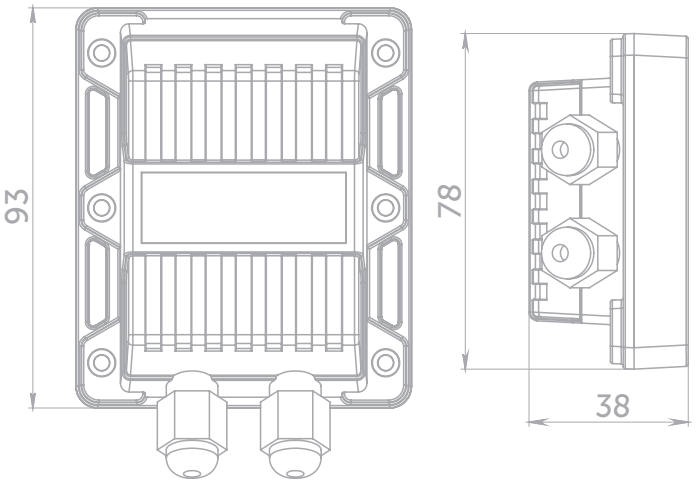

CONNECTION

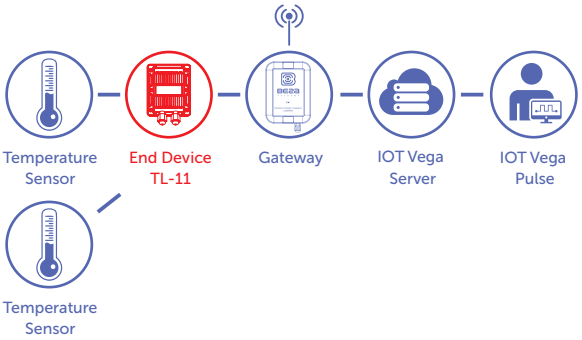

Main	
USB-port	micro-USB, type B
Operating temperatures, °C	-40...+85 °C
Measuring temperatures, °C	-55...+100 °C
Accuracy of temperature measurement	±0.5 °C in range -10...+40 °C; ±1 °C in range -55...+100 °C
LoRaWAN®	
LoRa antenna type	internal
LoRaWAN® class	A
Power	
Built-in battery	6400 mAh
Case	
Housing dimensions, no more than	93 x 78 x 38 mm
Ingress protection rating	IP67
Tamper	yes
Mounting	straps
Package	
Package dimensions	140 x 80 x 85 mm
Weight	0,208 kg

Vega M-BUS-1 – Converver M-BUS LoRaWAN®



DESCRIPTION

Converter M-BUS-1 is designed to read data from devices with the M-BUS Interface - with the subsequent accumulation and transmission of this information to the LoRaWAN® network. It can work as a LoRaWAN® class A or C device, depending on whether the Converter works with the built-in battery or with external power. In addition, Converter M-BUS-1 has two security inputs, as well as two open-drain outputs.

APPLICATION

- Data collection and transmission from equipment with the M-BUS Interface
- Industrial equipment with Interface M-BUS
- Heat metering devices
- Security Systems
- Load management through the open collector output
- A complete list of supported equipment is available on the product page on the website

SPECIFICATION

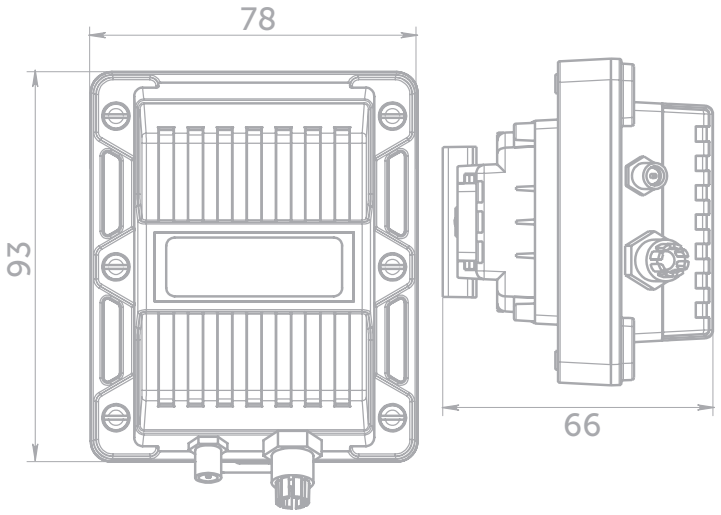

CONNECTION

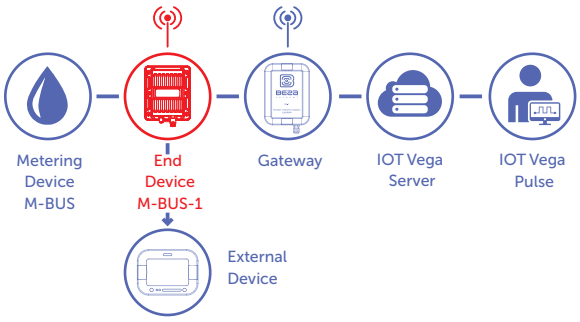

Main	
M-BUS inputs	1
Quantity of the connected M-BUS devices	no more than 10
Security inputs	2
Open-drain outputs	2
USB-port	yes
Operating temperatures	-40...+85 °C
LoRaWAN®	
LoRa class	A or C
Antenna connector	SMA
Power	
Built-in battery	6400 mAh
External power	10...36 V
Case	
Housing dimensions, no more than	93 x 78 x 66 mm
Ingress protection rating	IP65
Mounting	clamp fastening to the support, DIN-rail, wall-mounting
Package	
Package dimensions	140 x 80 x 85 mm
Weight	0,271 kg

Vega M-BUS-2 – Converter M-BUS LoRaWAN®



DESCRIPTION

Converter M-BUS-2 is designed to read data from devices with the M-BUS Interface - with the subsequent accumulation and transmission of this information to the LoRaWAN® network. Supply is carried out by the built-in battery.

APPLICATION

- Data collection and transmission from equipment with M-BUS interface
- Industrial equipment with M-BUS interface
- Heat metering devices
- A complete list of supported equipment is available on the website on the product page

SPECIFICATION

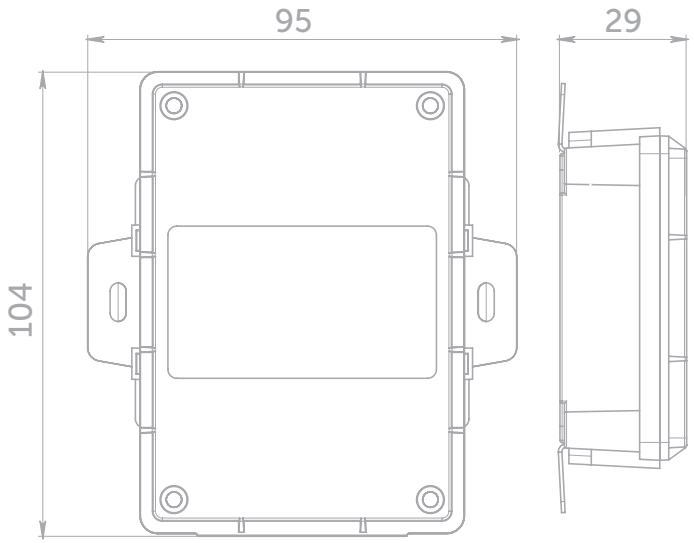

Main	
M-BUS inputs	1
Quantity of the connected M-BUS devices	no more than 10
USB-port	yes
Operating temperatures	-40...+85 °C
LoRaWAN®	
LoRaWAN® class	A
Antenna connector	SMA
Power	
Built-in battery	6400 mAh
Case	
Housing dimensions, no more than	104 x 95 x 29 mm
Ingress protection rate	IP54
Mounting	wall-mounting, with screws
Package	
Package dimensions	152 x 123 x 38 mm
Weight	0,310 kg

CONNECTION



Vega TP-11 – Converter 4-20 mA LoRaWAN®



DESCRIPTION

Universal input interface allows you to read readings from any sensors having an interface of 4-20 mA. Vega TP-11 collects the received data and transfers it to the LoRaWAN® network. In addition, Converter TP-11 has two alarm inputs, as well as two open-drain outputs.

APPLICATION

- Data collection and transmission from equipment with interface 4-20 mA
- Industrial equipment with 4-20 mA interface
- Temperature, humidity, atmospheric composition and other sensors
- Security Systems
- Load management through the open-drain output

SPECIFICATION

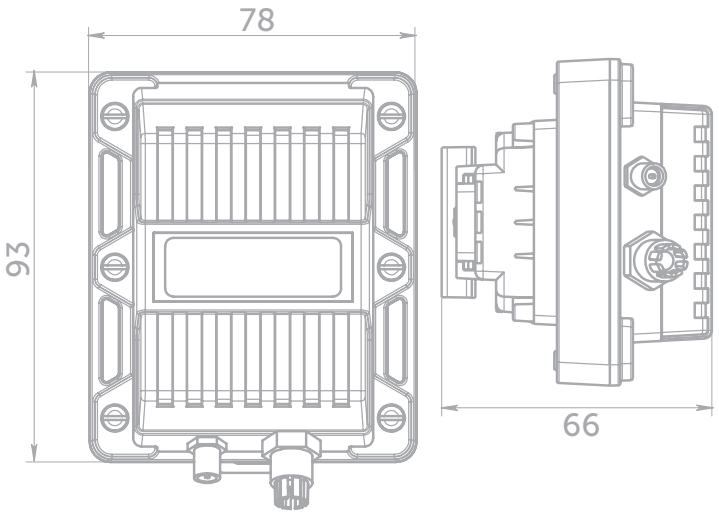

Main	
4-20 mA inputs	1
Security inputs	2
Open-drain outputs	2
USB-port	yes
Operating temperatures	-40...+85 °C
LoRaWAN™	
LoRa class	A or C
Antenna cpnnector	SMA
Power	
Built-in battery	6400 mAh
External power	10...36 V
Case	
Housing dimensions, no more than	93 x 78 x 66 mm
Ingress protection rating	IP65
Mounting	clamp fastening to the support, DIN-rail, wall-mounting
Package	
Package dimensions	140 x 80 x 85 mm
Weight	0,270 kg

CONNECTION

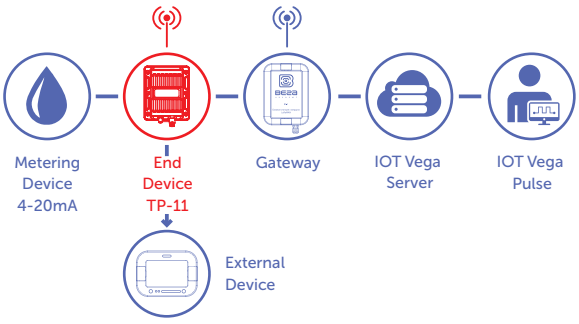

Vega GM-2 – LoRaWAN® Modem For Elster Gas Meter



DESCRIPTION

LoRaWAN® modem GM-2 is designed to take readings from Elster gas meters, with the subsequent accumulation and transmission of this information to the LoRaWAN® network.
Modem is equipped with Hall sensors, one of which calculates the current meter readings, and the other is located in such a way and has such a sensitivity level that it only responds to the presence of an external magnetic field (for example, when a strong magnet is placed near the gas meter to disable counting mechanism).
To protect against unauthorized access, modem has a tamper. There are also two security inputs and two control outputs.
The battery for the modem is an irreplaceable battery, designed for a service life of up to 10 years. Modem operates as a Class A LoRaWAN® device.

APPLICATION

- Data collection and transmission from Elster gas meters
- Load management through the open-drain output

SPECIFICATION

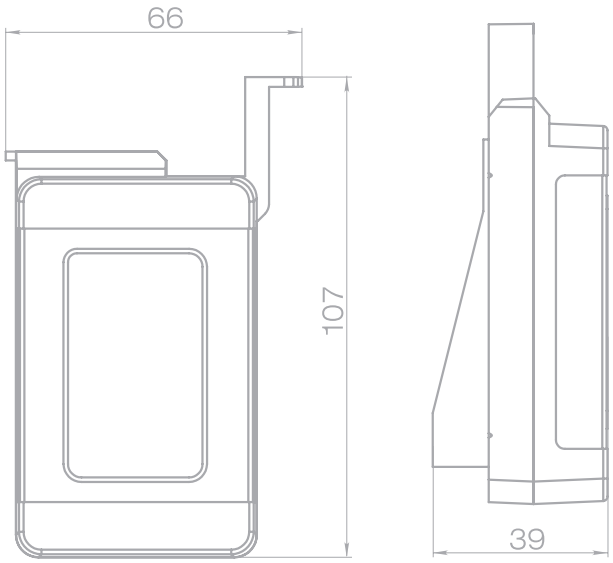

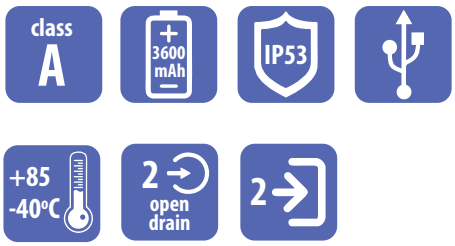

CONNECTION

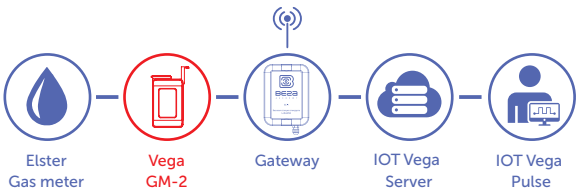

Main	
Security inputs	2
Open-drain outputs	2
USB-port	yes
Operating temperatures	-40...+85 °C
LoRaWAN®	
LoRaWAN class	A
LoRa antenna type	internal
Power	
Built-in battery	3600 mAh
Case	
Housing dimensions, no more than	107 x 66 x 39 mm
Ingress protection rating	IP53
Tamper	yes
Package	
Package dimensions	140 x 80 x 50 mm
Weight	0,100 kg

Vega LM-1 – Search Device



class A | IP67 | 6400 / 12800 mAh | +70 -40°C | GPG/ GLONASS

APPLICATION

- Determination of the coordinates of the protected object
- Data transmission on the protected object in places of lack of coverage of cellular networks
- Data collection and transmission to the LoRaWAN® network
- High mobility of the device provides the ability to monitor personnel, goods and equipment

CONNECTION

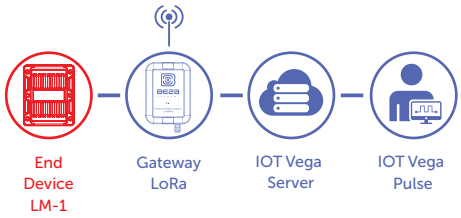

DESCRIPTION

The Vega LM-1 search device is designed to determine its position above sea level, the beginning of movement, the angle of deviation from the vertical, and its coordinates using GLONASS / GPS satellites inside the LoRaWAN® local network.
Vega LM-1 is able to determine the angle of deviation from the vertical with high accuracy thanks to the built-in three-axis accelerometer. This information can be used on the device to initiate an extraordinary communication session, as well as transmitted in a standard packet to the LoRaWAN® network. The increased capacity battery ensures the autonomous operation of the device up to 6 years when transmitting data once an hour.
Depending on the selected capacity of the built-in battery, there are two options for the delivery of the device:
Vega LM-16400 mAh
Vega LM-112800 mAh
Both options have the same other characteristics and functionality.

SPECIFICATION

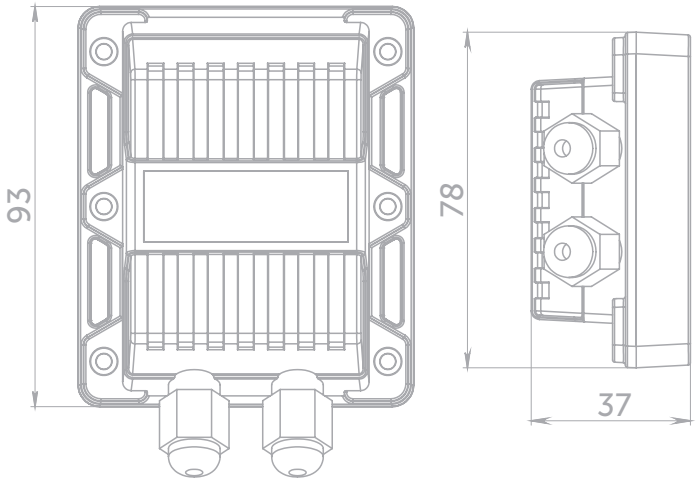

Main		
GLONASS/GPS antenna	internal	
Nevigation receiver sensitivity, not less	-160 dBm	
USB-port	micro-USB, type B	
Built-in three-axis accelerometer	yes	
Operating temperatures	-40...+70 °C	
LoRaWAN®		
LoRaWAN® class	A	
LoRa antenna type	internal	
Power		
Built-in battery	6400 mAh	12800 mAh
Case		
Housing dimensions, no more than	94 x 78 x 37 mm	
Ingress protection rating	IP67	
Mounting	magnetic/straps	
Package		
Package dimensions	140 x 80 x 50 mm	
Weight	0,232 kg	0,282 kg

Vega DP-2 – Leakage Sensor



DESCRIPTION

The sensor is mounted on the wall close to the floor in the area of possible leakage. In contact with water, a circuit closes.

APPLICATION

- Control in rooms where there is a risk of water leakage
- Control of flooding of equipment and communication
- Smart Home systems
- Response when the contact circuit is closed in any environment

SPECIFICATION

Main	
Cable length	2 m
Housing dimensions, no more than	56 x 24 x 10 mm
Mounting	Wall-mounting
Weight	0,022 kg
Package dimensions	40 x 24 x 79 mm

Antennas For Gateway Antenna 868-01 And Antenna 868-01-A10

SPECIFICATION

Main	868-01	868-01-A10
Frequency plan	858-878MHz	
Gain	6 dBi	10 dBi
Polarization	vertical	
SWR	not worse 1.5	
Impendance	50 Om	
Maximum power	50 W	
Antenna length with mounting	0,8 m	2 m
Cable length	2 m	
Permissible wind	60 m/s	
Mounting	mast-support	
Weight	0,74 kg	2 kg

DESCRIPTION

Antenna 868-01 connects to the gateway through an SMA/N connector and has a gain of 6 dBi.
Antenna 868-01-A10 connects to the gateway through an N-type connector and has a gain of 10 dBi.
Antennas 868-01 and 868-01-A10 supplied complete with cable.

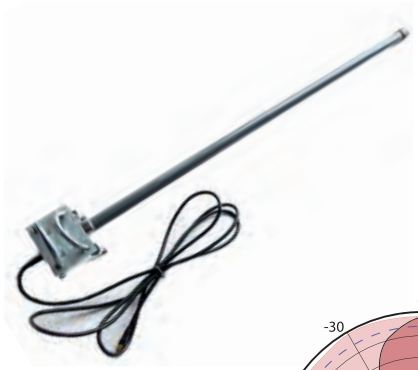

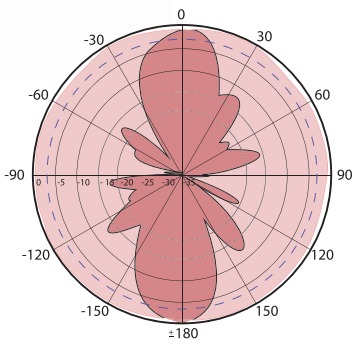

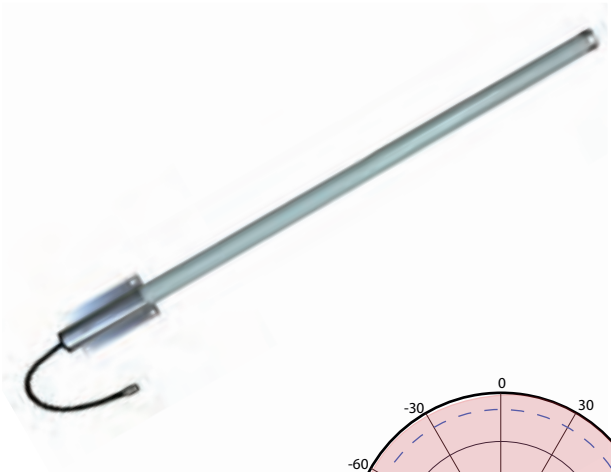

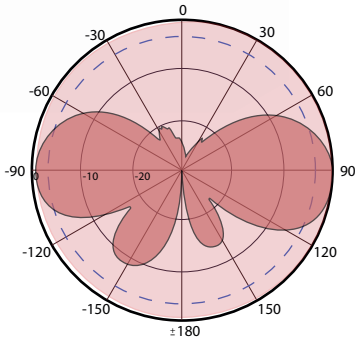

NB-IoT End Devices





	NB-11	NB-12	NB-13	NB-13 GSM	NB-14	NB-15	SH-2
Pulse inputs	4	-	-		-	up to 2	up to 2
Analog inputs	-	1	-		-	2	2
Digital inputs	2	2	2		2	up to 2	up to 2
Input interface	-	1-Wire, current loop	1-Wire, RS-232/RS-485		1-Wire, resistance control	1-Wire/RS-485	1-Wire/RS-485
Maximum number of batteries 6400 mAh included in package	1	2	-		2	2	2
External power	-	-	5...55 V		-	5...55 V	5...55 V
External Devices Power Output	-	-	yes, 8 V		-	-	-
Communication type	LTE Cat NB1			LTE Cat NB1, GSM	LTE Cat NB1		LoRaWAN
Communication protocol	MQTT						LoRaWAN
Housing dimensions	96 x 96 x 50						
Ingress protection rating	IP67						
Antenna type	external						
Data Collection Period	5, 15, 30 minutes, 1, 2, 3, 4, 6, 12 or 24 hours						5, 15, 30 minutes, 1, 6, 12 or 24 hours
Communication Period	5, 15, 30 minutes, 1, 2, 3, 4, 6, 12 or 24 hours						5, 15, 30 minutes, 1, 6, 12 or 24 hours

Vega NB-11 – NB-IoT Pulse Counter



DESCRIPTION

Pulse counter Vega NB-11 is designed to count pulses arriving at 4 independent inputs, with the subsequent accumulation and transmission of this information to the NB-IoT network.
Also, the Vega NB-11 device can be used as a security unit, - two additional inputs work in security mode, there is also a Hall sensor.

APPLICATION

- On utility metering devices and industrial equipment with a pulse output type reed switch (dry contact)
- On utilities metering devices and industrial equipment with type open-drain output

SPECIFICATION

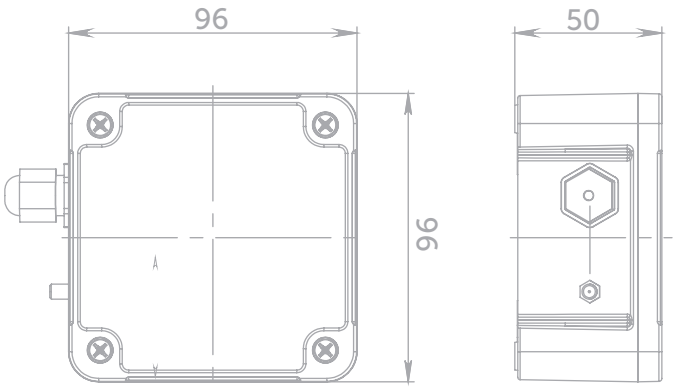

Main	
Pulse inputs	4
Maximum frequency of input signal	200 Hz
Security inputs	2
USB-port	micro-USB, type B
Operating temperatures	-40...+85 °C
Hall sensor	yes
Communication	
Supported cellular standards	LTE Cat NB1
Data transfer protocol	MQTT
Battery life	2 years if the data transferring once a day
LTE NB-IoT antenna type	external
Power	
Built-in battery	6400 mAh
Case	
Housing dimansions, no more than	96 x 96 x 50 mm
Ingress protection rating	IP67
Package	
Package dimensions	165 x 118 x 57 mm
Weight	0,350 kg

CONNECTION

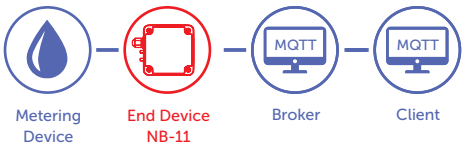

Vega NB-12 – NB-IoT Modem With 4-20 mA Interface





DESCRIPTION

Modem Vega NB-12 is designed to take readings from 4-20 mA Interface, analog input and 1-Wire, with the subsequent accumulation and transmission of this information to the GSM network using NB-IoT technology. Vega NB-12 has an external NB-IoT antenna and case protection IP67.

APPLICATION

- Data collection and transmission from equipment with 1-Wire interface
- Data collection and transmission from equipment with 4-20 мА interface
- Data collection and transmission from equipment with analog output
- As a security sensor

SPECIFICATION

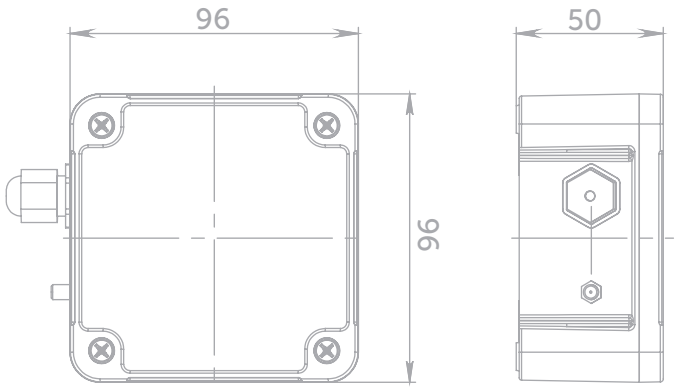

CONNECTION

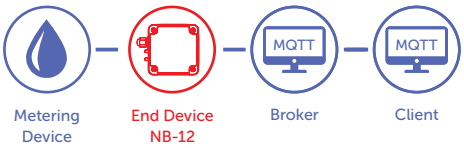

Main	
Analog inputs	1
Interfaces	1-Wire, current loop 4-20 mA
Security inputs	2
USB-port	micro-USB, type B
Operating temperatures	-40...+85 °C
Hall sensor	yes
Communication	
Supported cellular standards	LTE Cat NB1
Data transfer protocol	MQTT
Battery life	1 year if the data transferring once a day
LTE NB-IoT antenna type	external
Power	
Built-in battery	6400 mAh (one or two, depending on delivery conditions)
Case	
Housing dimensions, no more than	96 x 96 x 50 mm
Ingress protection rating	IP67
Package	
Package dimensions	165 x 118 x 57 mm
Weight	0,350 kg

Vega NB-13/NB-13 GSM – NB-IoT Modem With RS-232/RS-485 Interface



IP67 | LTE Cat NB1 | GSM | security | +85 -40°C

DESCRIPTION

Modem Vega NB-13 is designed to organize a transparent radio channel between connected external devices via Interface RS-232 / RS-485 and 1-Wire, and the NB IoT network. Modem Vega NB-13 does not accumulate data and is always in touch.
There is NB-13 GSM version with additional GSM communication channel.

APPLICATION

- On utility metering devices and industrial equipment with interface 1-Wire, RS-232 / RS-485
- As a security unit (two security inputs and a Hall sensor)

SPECIFICATION

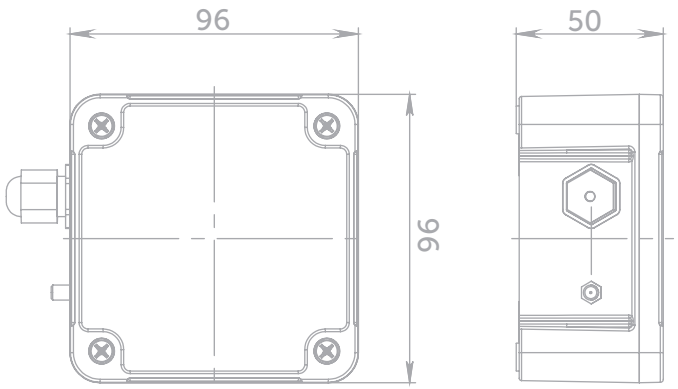

Main	NB-13	NB-13 GSM
Interfaces	RS-232/RS-485, 1-Wire	
Security inputs	2	
USB-port	micro-USB, type B	
Operating temperatures	-40...+85 °C	
Hall sensor	yes	
Communication		
Supported cellular standards	LTE Cat NB1	LTE Cat NB1 GSM
Datas transfer protocol	MQTT	
LTE NB-IoT antenna type	external	
Power		
External power	5...55 V	
Case		
Housing dimensions	96 x 96 x 50 mm	
Ingress protection rating	IP67	
Package		
Package dimensions	165 x 118 x 57 mm	
Weight	0,290 kg	

CONNECTION

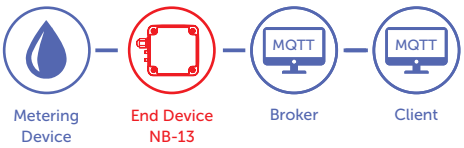

Vega NB-14 – NB-IoT Modem With Resistance Control



DESCRIPTION

Modem Vega NB-14 is intended for monitoring the state of insulation of pipelines of heating networks and monitoring the integrity of the signal conductors of the pipeline, with the subsequent accumulation and transmission of this information to the NB-IoT network. The device allows you to determine the presence of the following defects:
- wet insulation;
- breakage of signal conductors;
- short circuit of the signal wire with a metal pipe (manifests itself similarly to the defect "wet insulation")

APPLICATION

- On pipelines with polyurethane foam thermal insulation
- Collect information from temperature sensors through 1-Wire
- As a security unit (two security inputs and a Hall sensor)

SPECIFICATION

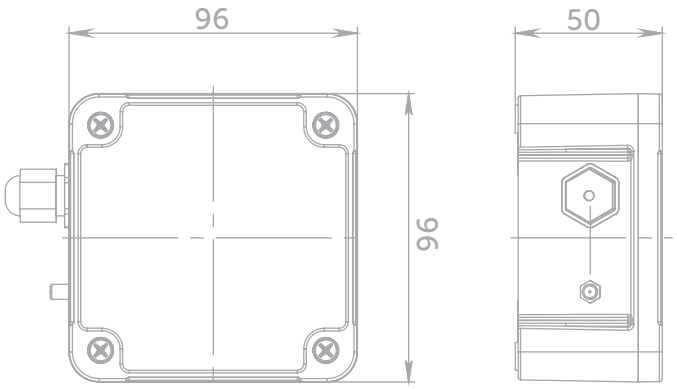

Main	
Monitoring of signal wire integrity and wet insulation	2 channels
Interfaces	1-Wire
Security inputs	2
USB-port	micro-USB, type B
Operating temperatures	-40...+85 °C
Hall sensor	yes
Communication	
Supported cellular standards	LTE Cat NB1
Data transfer protocol	MQTT
Battery life	2 years if the data transferring once a day
LTE NB-IoT antenna type	external
Power	
Built-in battery	6400 мАч (one or two, depending on delivery conditions)
Case	
Housing dimensions	96 x 96 x 50 mm
Ingress protection rating	IP67
Package	
Package dimensions	165 x 118 x 57 mm
Weight	0,350 kg

CONNECTION

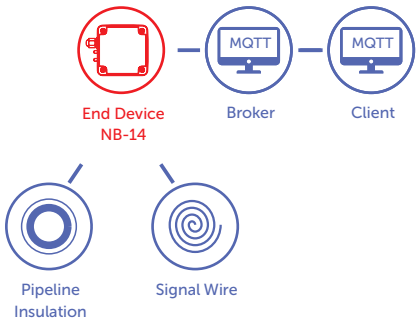

Vega NB-15 – NB-IoT Multipurpose Modem



class A/C | 6400 12800 mAh | IP67 | 2 analog | 2 digital | RS-485 | 1-wire | +85 -40°C

APPLICATION

- Collection and transmission of data from equipment with digital outputs
- Data collection and transmission from equipment with analog outputs
- Collection and transmission of data from equipment with interface RS-485 or 1-Wire
- NB-IoT data transfer
- Industrial equipment

CONNECTION

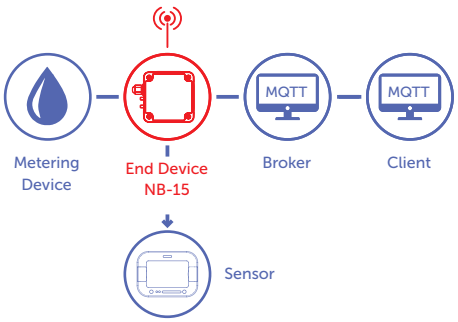

DESCRIPTION

The Vega NB-15 is a versatile, multi-functional data transfer modem. The device operates on NB-IoT data transfer technology.
The modem has two digital inputs that can be configured as pulse or as security. In addition, the device has two analog inputs, interface 1-Wire and interface RS-485.
The modem power supply can be one or two built-in batteries with a capacity of 6400 mAh, or an external power supply of 5...55 V. Depending on the selected capacity of the built-in battery, there are two options for the delivery of the device:
Vega NB-15 6400 mAh
Vega NB-15 12800 mAh
Both options have the same other characteristics and functionality.

SPECIFICATION

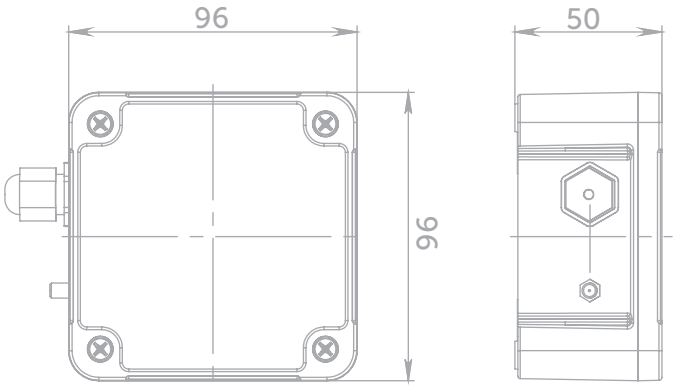

Main	
Digital inputs	2
Analog inputs	2
USB-port	yes
Interface	RS-485 / 1-Wire
Operating temperatures	40...+85 °C
Channels of connection	LTE NB-IoT
NB-IoT	
Supported cellular standards	LTE Cat NB1
Antenna connector	SMA
Power	
Built-in battery	6400 mAh (one or two, depending on delivery conditions)
External power	5...55 V
Case	
Housing dimensions	96 x 96 x 50 mm
Ingress protection rating	IP67
Package	
Package dimensions	165 x 118 x 57 mm
Weight	0,350 kg

Vega SH-2 – LoRaWAN® Multipurpose Modem



class A | 6400 12800 mAh | IP67 | 2 analog | 2 digital | RS-485 | 1-wire | +85 -40°C

APPLICATION

- Collection and transmission of data from equipment with digital outputs
- Data collection and transmission from equipment with analog outputs
- Collection and transmission of data from equipment with interface RS-485 or 1-Wire
- NB-IoT and LoRa data transfer
- Industrial equipment

LoRa CONNECTION

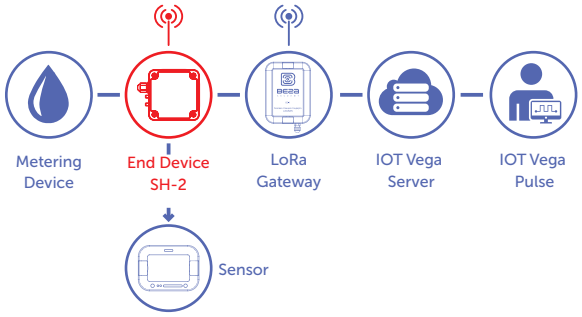

DESCRIPTION

Vega SH-2 is a universal means of transmitting information using LoRaWAN® technology with extensive functionality*.
The modem has two digital inputs that can be configured as pulse or as security. In addition, the device has two analog inputs, Interface 1-Wire and Interface RS-485.
The modem power supply can be one or two built-in batteries with a capacity of 6400 mAh, or an external power supply of 5...55 V. Depending on the selected capacity of the built-in battery, there are two options for the delivery of the device:
Vega SH-2 6400 mAh
Vega SH-212800 mAh
Both options have the same other characteristics and functionality.

*The device can operate using NB-IoT technology. To do this, you need to install the firmware for the NB-15 on the device.

SPECIFICATION

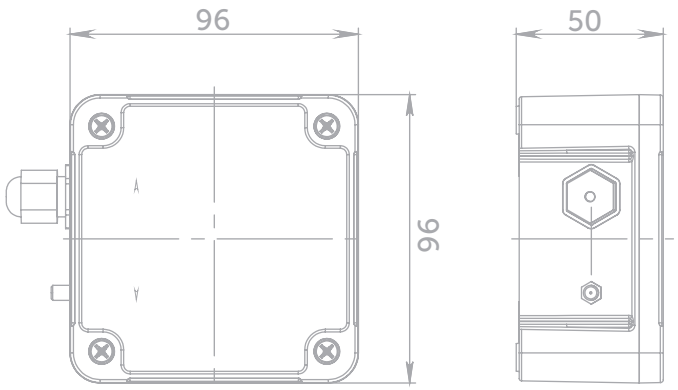

Main	
Digital inputs	2
Analog inputs	2
USB-port	yes
Interface	RS-485 / 1-Wire
Operating temperatures	40...+85 °C
Channels of connection	LoRaWAN
LoRaWAN®	
LoRaWAN® class	A
Antenna connector	SMA
Power	
Built-in battery	6400 mAh (one or two, depending on delivery condition)
External power	5...55 V
Case	
Housing dimensions, no more than	96 x 96 x 50 mm
Ingress protection rating	IP67
Package	
Package dimensions	165 x 118 x 57 mm
Weight	0,410 kg

Smart Metering Devices







	SHVE-15	SGVE-15	SHVE-20	SGVE-20	SGBM-1,6	Ce2726A R01	Ce2726A W03	Mercury 206	Ce2727A R02	Ce2727A B04
Built-in Battery Capacity	3600	3600	3600	3600	1200	-	-	-	-	-
External Power	-	-	-	-	-	220/230			3x220/380 3x230/400	
Housing Dimensions	⌀75 x 80		⌀ 75 x 85		70x88x76	115x78x66	200x120x52	154x105x72	125x118x70	295x172x75
Ingress Protection Rating	IP54					IP51				
Device Class	A					C				
Communication Type	LoRaWAN / NB-IoT					LoRaWAN				
Antenna Type (LoRa)	internal									
Channels number (LoRa)	16									
Frequency plans (default)	EU868, RU868, KZ865									
Frequency plans (on demand)	any regional according to "LoRaWAN 1.1 Regional Parameters"									
Activation Type	ABP or OTAA									
Communication Period	1, 6, 12 or 24 hours, 1 week, 1 month									
Sensitivity	-138 dBm									
Radio Coverage in Restrained Urban Conditions	up to 5 km									
Radio Coverage Within Line of Sight	uo to 15 km									
Transmitter Power	up to 100 mW (configurable)					25 mW				

LoRaWAN® и NB-IoT Smart Meters of Cold and Hot Water



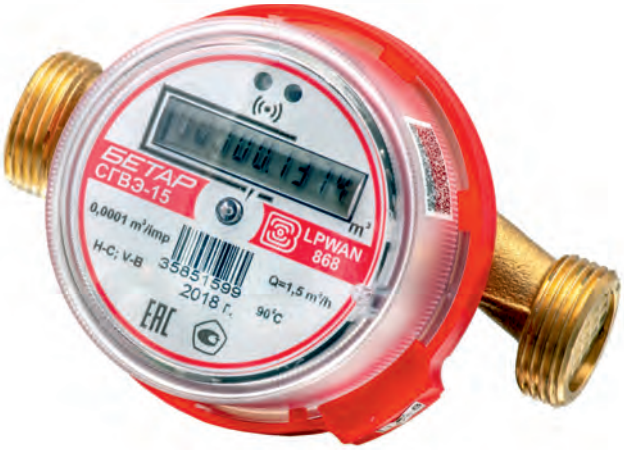

DESCRIPTION

Smart water meter allows you to record water and transmit readings to the radio network.
The device consists of two interconnected parts in a common Case, one of which is a water meter, and the other is a radio module.
For cold and hot water meters manufactured by Betar, our company produces two types of radio modules: those working on LoRaWAN® technology and working on NB-IoT technology.
The diameter of the section of the conditional passage can be 15 or 20 mm.

APPLICATION

- Water metering systems in domestic premises

SPECIFICATION

Main	SHVE	SGVE
Operating water pressure	up to 1 MPa	
Operating water temperatures	+5...+50 °C	+5...+90 °C
Operating environment temperatures	+5...+50 °C	
Diameter of conditional pass	15 or 20 mm	
Interface	optoport	
Communication	LoRaWAN® or NB-IoT	
Power		
Built-in battery	3600 mAh	
Case		
Ingress protection rating	IP54	



LoRa CONNECTION

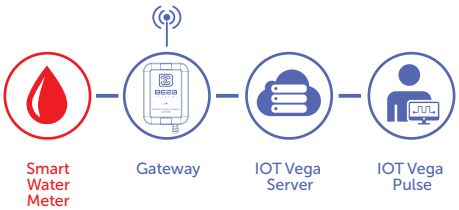

NB-IoT CONNECTION

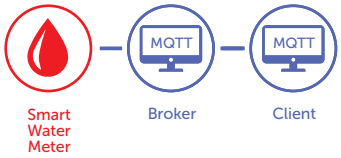



CE2726A - Electricity Single-Phase Meter



DESCRIPTION

A smart meter allows you to record electricity and transmit readings to the LoRaWAN® network.
The device consists of two interconnected parts in a common case, one of which is a single-phase energy meter, and the other is a LoRaWAN® radio module. It is presented in two versions: R01 without relay and W03 with relay 60 A.

APPLICATION

- Electricity metering systems in domestic and commercial premises
- Accounting of active and reactive energy in multi-tariff (up to 4 tariffs) or single-tariff modes

Mercury 206 - Electricity Single-Phase Meter



class C | accuracy class 1 | IP51 | 220/230V

DESCRIPTION

Counters are designed to account for active and reactive electricity in single-phase AC networks and can be operated both independently and as part of an automated data collection system.
Built-in load shedding relay.

APPLICATION

- Electricity metering systems in domestic and commercial premises
- Accounting of active and reactive energy in multi-tariff (up to 4 tariffs) or single-tariff modes

CONNECTION

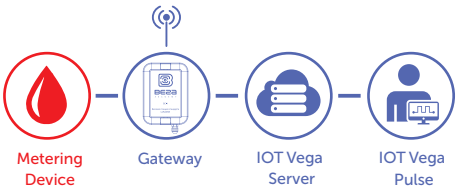

SPECIFICATION

Main	Mercury 206	Ce2726A RF	Ce2726A RF.OP.Z
The accuracy class (active energy)		1	
Nominal network frequency		50 Hz	
Number of tariffs		up to 4	
Operating temperatures		-40...+60 °C	
Total power consumed in the current citcuit, no more than		0,5 V·A	
LoRaWAN®			
LoRaWAN® device class		C	
LoRa antenna type		internal	
Power			
External power		220/230 V	
Case	Mercury 206	R01	W03
Ingress protection rating		IP51	
Housing dimensions, mm	154 x 105 x 72	115 x 78 x 66	200 x 120 x 52

CE2727A - Electricity Three-Phase Meter





DESCRIPTION

A smart meter allows you to record electricity consumption readings and transmit it to the LoRaWAN® network.
The device consists of two interconnected parts in a common case, one of which is a three-phase electricity meter, and the other is a LoRaWAN® radio module.
It is presented in two versions: R02 without relay and B04 with relay 60 A.

APPLICATION

- Electricity metering systems in domestic and commercial premises

SPECIFICATION

Main	Ce2727A RF	Ce2727A RF.OP.Z
The accuracy class	1	
Operating temperatures	-40...+70 °C	
Total power consumed in the current circuit, no more than	0,2 V·A	
Total power consumed in the voltage circuit, no more than	10 V·A	
LoRaWAN®		
LoRaWAN® device class	C	
LoRa antenna type	internal	
Sensitivity	-138 dBm	
Power		
External three-phase power	3x220/380; 3x230/400 V	
Case	R02	B04
Ingress protection rating	IP51	
Housing dimensions	125 x 118 x 70	295 x 172 x 75



CONNECTION

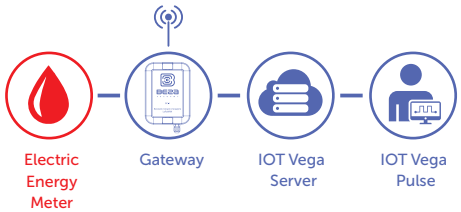

SGBM-1,6 - Electronic Gas Meter





DESCRIPTION

A smart gas meter allows you to record gas and transmit readings to the LoRaWAN® network.
The device consists of two interconnected parts in a common case, one of which is a gas meter, and the other is a LoRaWAN® radio module.

APPLICATION

- Accounting of gas consumption in domestic, commercial and industrial premises

SPECIFICATION

Main	
Operating gas pressure	5 kPa
Operating temperatures	-10...+50 °C
Gas flow measurement range	от 0,04 m³/h до 1,6 m³/h
LoRaWAN®	
LoRaWAN® device class	A
LoRa antenna type	internal
Sensitivity	-138 dBm
Power	
Built-in battery	1200 mAh
Case	
Ingress protection rating	IP54
Housing dimensions	70 x 88 x 76 mm



CONNECTION

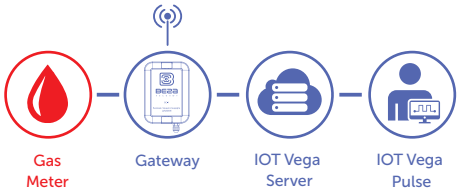

Vega FSK Dongle



DESCRIPTION

Designed for remote connection to LoRaWAN® end devices manufactured by Vega-Absolute for their configuration and firmware update. Remote connection is carried out at a distance of up to 100 meters, depending on the conditions formed at the operation site, which allows servicing the devices without having direct access to them.

APPLICATION

- Remote configuration and firmware update of end devices manufactured by Vega-Absolute.

SPECIFICATION



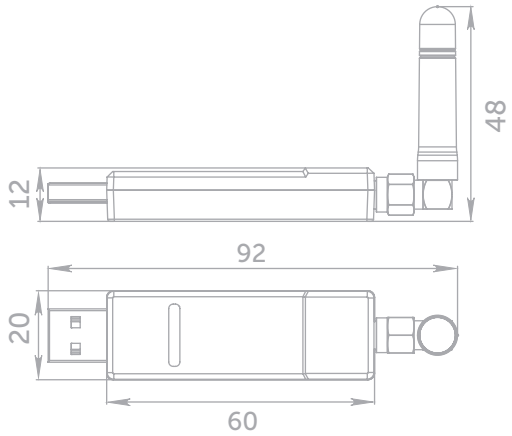

Main	
USB-port	yes
Operating temperatures	-40...+85 °C
Sensitivity	-138 dBm
LoRa antenna type	external
Case	
Ingress protection rating	IP51
Housing dimensions	92 x 20 x 48 mm

CONNECTION



Converter USB <-> Optoport For Water Meters



DESCRIPTION

Converter is required to connect Betar-Vega SHVE/SGVE water meters to a computer to use the Vega LoRaWAN® Configurator application.

Converter connects to the computer with a standard mini USB cable and reads the data from the meter via an optical port, thus communicating between the meter and the application.

Vega Smart Series









	Smart-MC0101	Smart-MS0101	Smart-HS0101	Smart-SS0102	Smart-UM0101
Housing dimensions	78 x 37 x 22* *with magnetic part	36 x 50 x 70	78 x 37 x 22* *with magnetic part	⌀117 x 44	
Ingress protection rating	IP20	IP30	IP20		
Power	CR123A 3V, 1400 mAh (1 pc.)			CR123A 3V, 1400 mAh (2 pcs.)	
LoRaWAN Device Class	A				
LoRa Antenna Type	internal				
LoRa Channels Number	16				
Frequency Plans (default)	RU868, EU868, KZ865, custom (EU868 based)				
Frequency Plans (on demand)	any regional according to "LoRaWAN 1.1 Regional Parameters"				
Activation Type	ABP or OTAA				
Communication Period	5, 15, 30 minutes, 1, 6, 12 or 24 hours				
Sensitivity	-138 dBm				
Radio Coverage In Restrained Urban Conditions	up to 5 km				
Radio Coverage Within Line Of Sight	up to 15 km				
Transmitter Power	up to 100 mW (configurable)				

Vega Smart-UM0101 – Universal Office Sensor 5 in 1



DESCRIPTION

Vega Smart-UM0101 sensor combines a several functions: control of temperature, humidity parameters of the environment, CO2 level, noise and ambient light level with the ability to set thresholds of these ones. Sensor's base can be mounted on a flat surface and then main sensor module is attached to the base. The device have a removal sensor. Every time alarm event occur, information message will send to LoRaWAN® network.
Co2 sensor may be installed on the board or not in depend on the order conditions.

APPLICATION

- Control of working conditions in office and industrial premises
- "Smart Home" systems built on LoRaWAN® technology



CONNECTION

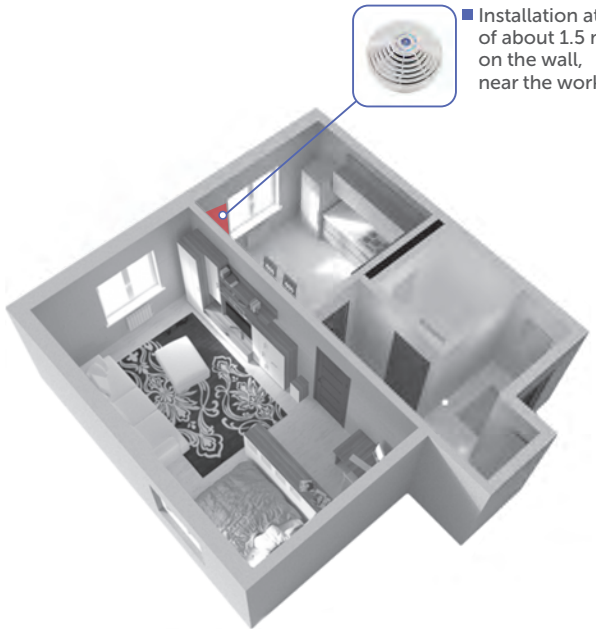

- Installation at a height of about 1.5 meters, on the wall, near the working area

SPECIFICATION

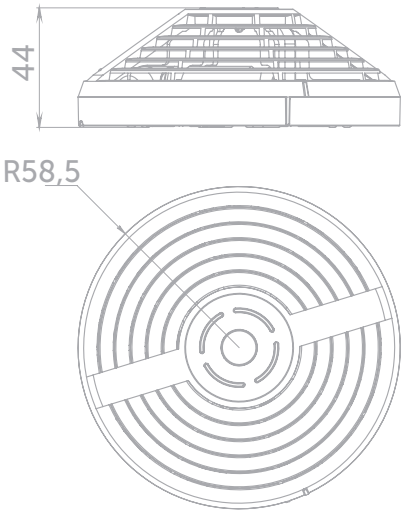

Main	
USB-port	micro-USB, type B
Operating temperatures	-10...+85 °C
Measured temperatures	-10...+85 °C
Measured humidity range	0...80%
Measured CO_2 concentration level range	0...2000 ppm
Measured ambient light level range	10...10000 lx
Measured sound pressure level range	40...110
LoRaWAN®	
LoRaWAN® device class	A
LoRa antenna type	internal
Power	
Replaceable batteries, total capacity	2xCR123A 3 V, 2800 mAh
Case	
Housing dimensions, no more than	⌀117 x 44 mm
Removal sensor	yes
Ingress protection rating	IP20
Package	
Package dimensions	130 x 115 x 58 mm
Weight	0,208 kg

Vega Smart-MC0101 – Door And Window Sensor



DESCRIPTION

Sensor can work both on opening and closing doors or windows. Each time it is triggered, an alarm packet is sent to LoRaWAN® network.
Released in four colors - brown, white, black, beige - which allows the device to look organically in any interior.

APPLICATION

- Protection of premises, buildings and structures
- Smart Home systems

SPECIFICATION

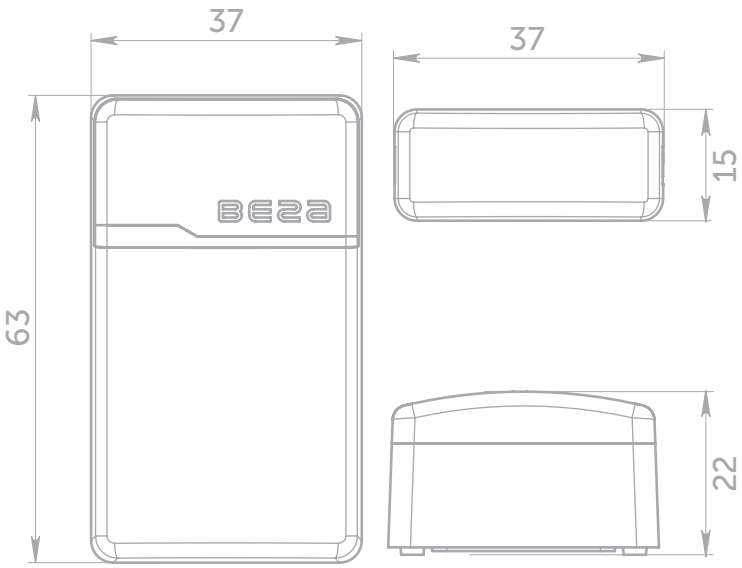

Main	
USB-port	yes
Operating temperatures	-40...+85 °C
Built-in temperature sensor	yes
LoRaWAN®	
LoRaWAN® device class	A
LoRa antenna type	internal
Power	
Replaceable battery	CR123A 3V, 1400 MAh
Case	
Housing dimensions, no more than	63 x 37 x 22 mm
Magnetic part dimensions, no more than	15 x 37 x 22 mm
Ingress protection rating	IP20
Package	
Package dimensions	80 x 40 x 25 mm
Weight	0,056 kg

CONNECTION

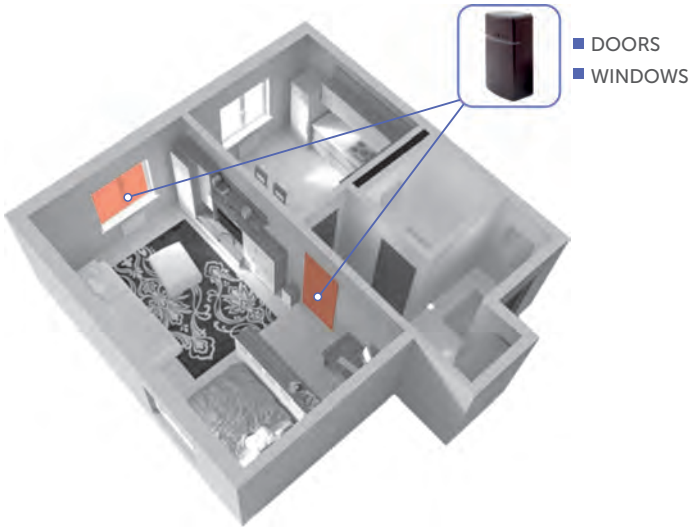

Vega Smart-HS0101 –
Sensor of Humidity/Temperature/Door And Window/Acceleration



DESCRIPTION

Vega Smart-HS0101 sensor combines a several functions, namely: door and window sensor, accelerometer, which determines the presence of vibration and the angle of deviation from the vertical, control of temperature and humidity parameters of the environment with the ability to set the ranges of these parameters. Every time alarm event occur, information message will send to LoRaWAN® network. Vega Smart-HS0101 can be used to control premises, buildings and structures, as well as in Smart Home systems, built on LoRaWAN® technology.

APPLICATION

- Control of premises, buildings and structures
- Protection of premises, buildings and structures
- Smart Home systems based on LoRaWAN® technology
- Temperature and humidity control
- Determination of the angle of deviation from the vertical



SPECIFICATION

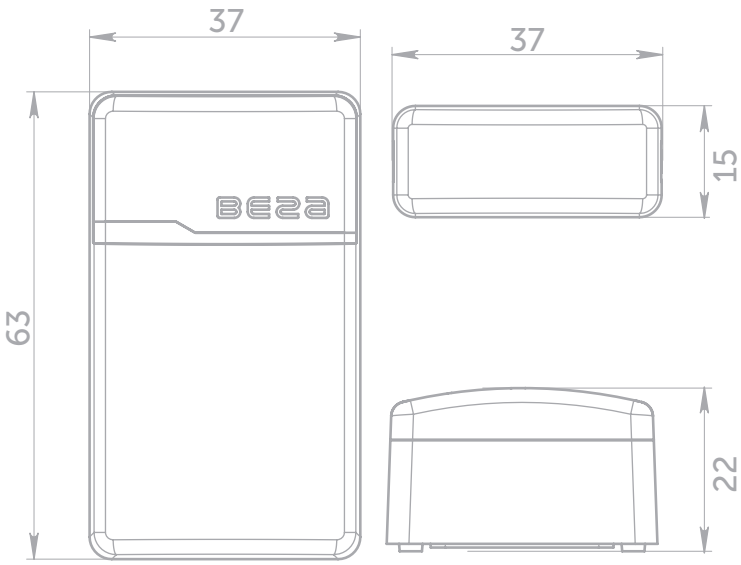

Main	
USB-port	yes
Operating temperatures	-40...+85 °C
Built-in temperature sensor	yes
LoRaWAN®	
LoRaWAN® device class	A
LoRa antenna type	internal
Power	
Replaceable battery	CR123A 3V, 1400 mAh
Case	
Housing dimensions, no more than	63 x 37 x 22 mm
Magnetic part dimensions, no more than	15 x 37 x 22 mm
Ingress protection rating	IP20
Package	
Package dimensions	80 x 40 x 25 mm
Weight	0,057 kg

CONNECTION

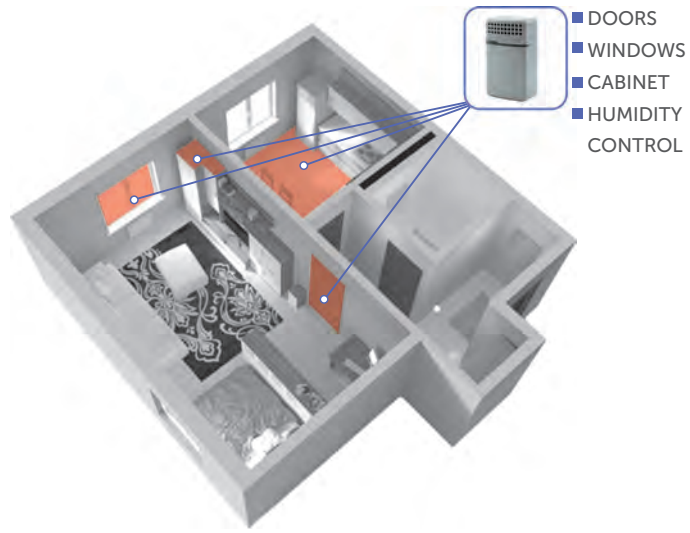

Vega Smart-MS0101 – Motion Sensor



DESCRIPTION

An infrared motion sensor is triggered when moving objects are detected in the guard zone. Each time it triggers, the sensor sends the alarm packet to the LoRaWAN® network. Has convenient mounting and wide viewing angle.

APPLICATION

- Security Alarm and Detection Systems
- Smart Home Systems

SPECIFICATION

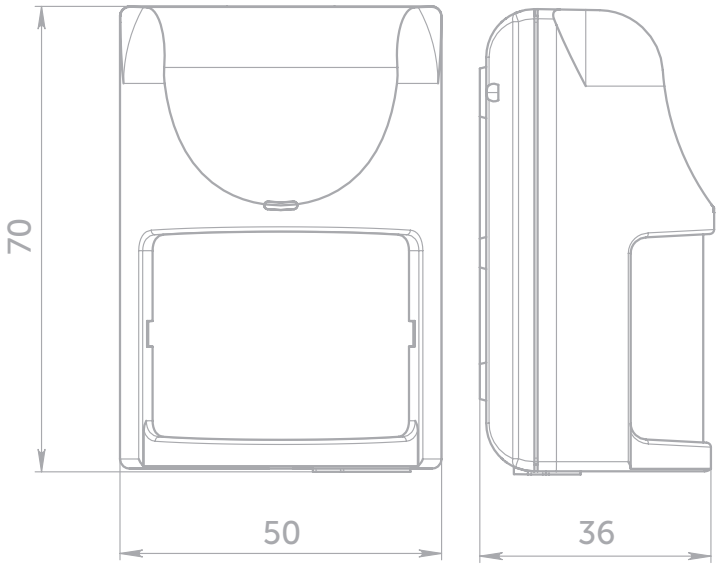

Main	
USB-port	yes
Operating temperatures	-40...+70 °C
Built-in temperature sensor	yes
Maximum detection range	not less than 15 m
Intruder speed range	0,3...3m/s
Sensor mounting height	2,1 m
Angle of the sensor in the vertical plane	6°
Resistance to external light	6500 lx
LoRaWAN®	
LoRaWAN® device class	A
LoRa antenna type	internal
Power	
Replaceable battery	CR123A 3V, 1400 mAh
Case	
Housing dimensions, no more than	70 x 50 x 36 mm
Ingress protection rating	IP30
Package	
Package dimensions	95 x 70 x 45 mm
Weight	0,075 kg



CONNECTION

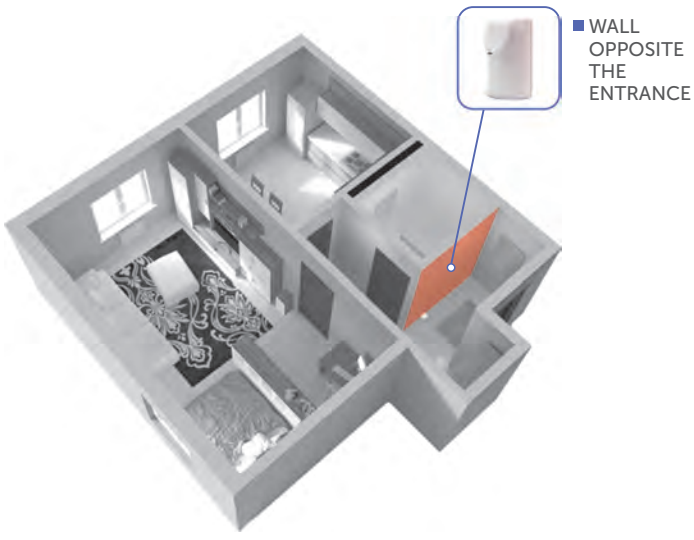

- WALL OPPOSITE THE ENTRANCE

Vega Smart-SS0102 And Vega Smart-SS0201 – Stand-Alone Smoke Sensors



DESCRIPTION

Smoke detectors Vega Smart are designed to detect smoke in a protected area. The Sensor registers smoke particles with an optical electronic method and provides alerts through light and sound indications. Vega Smart-SS0201 works offline.
Vega Smart-SS0102 can work both in standalone mode and additionally send information about its status to the LoRaWAN® network.

APPLICATION

- Fire protection systems signalization and response
- Smart Home systems

SPECIFICATION

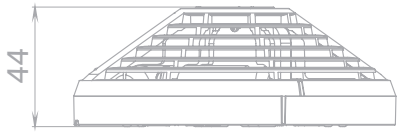

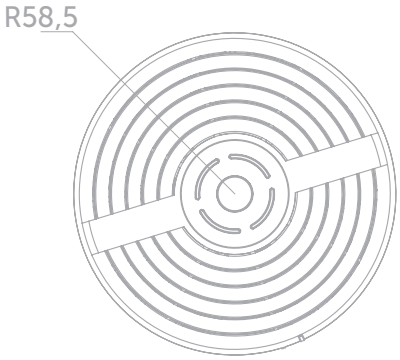

Main	
USB-port	yes
Operating temperatures	-10...+55 °C
Built-in temperature sensor	да
Maximum illumination level	12000 lx
Sensitivity, dB/m	0,05...0,2
The volume of the sound signal while a distance from the detector is 1 m	85 dB
LoRaWAN® (only for Smart-SS0102)	
LoRaWAN® device class	A
LoRa antenna type	internal
Sensitivity	-138 dBm
Power	
Replaceable battery	2xCR123A 3V, 2800 mAh
Case	
Housing dimensions, no more than	⌀117 x 44 mm
Package	
Package dimensions	130 x 115 x 58 mm
Weignt	0,212 kg

class A

2800 mAh 2xCR123A 3V

IP20

CONNECTION

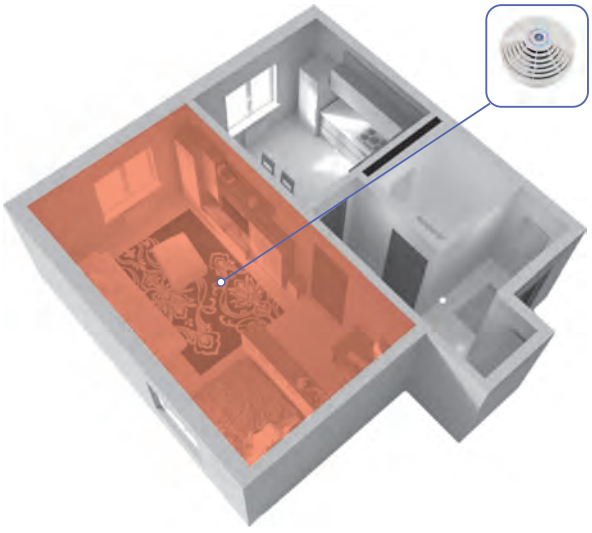

- CEILING

Our Partners





























































Our Third-Part Software Integrations





















+7 (383) 206-41-45, 206-41-35
8-800-550-41-35
info@vega-absolute.ru
vega-absolute.ru ▪ iotvega.com
119A, Bol'shevistskaya str., Novosibirsk, Russia, 630009

Edition #6
Web only